REV.	ECN NO.	DATE	SIGN	DESCRIPTION
A		2019/07/09	Sam Ho	New Release
B	C201549	2020/10/21	Vicky	△B X4
C	C210219	2021/03/03	Vicky	△C X9

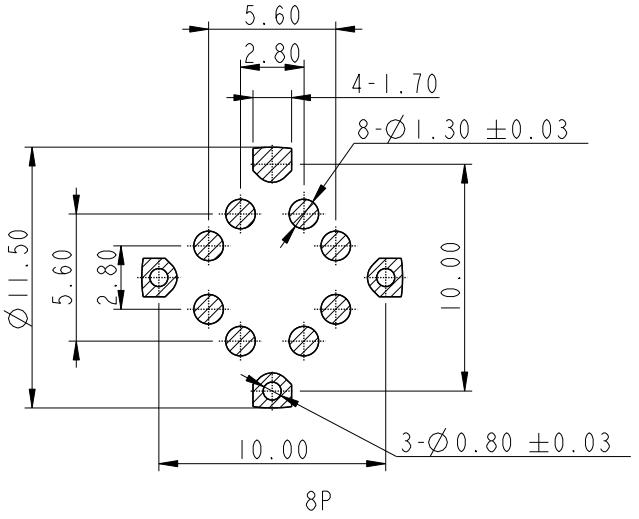

△C PCB Layout

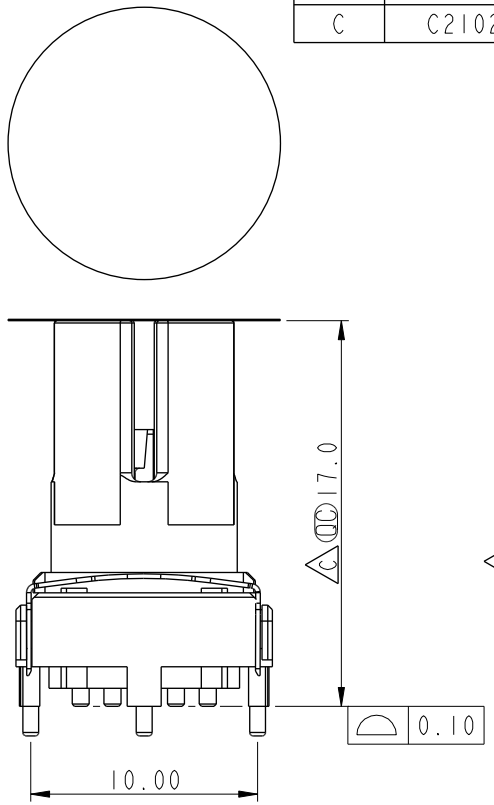

△B MSXS-XXPFFT-EE0002

XX: No. Of Pin

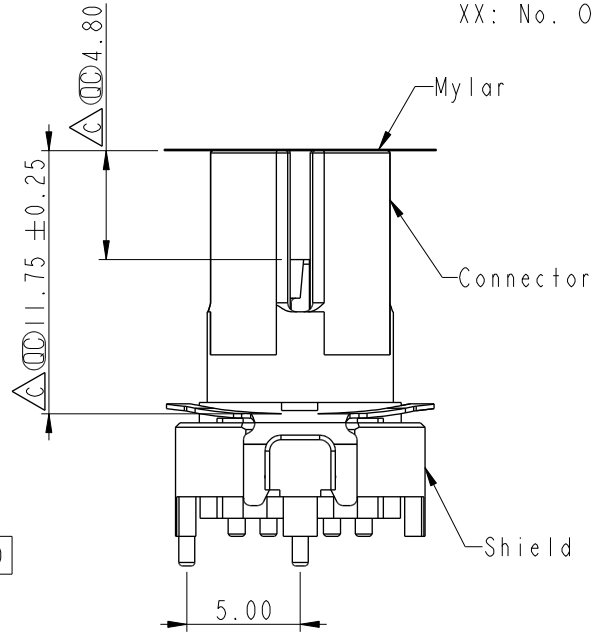

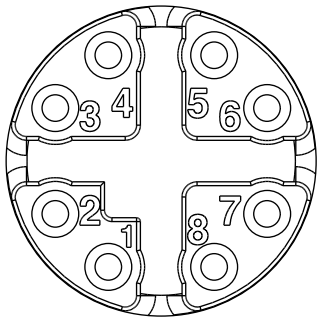

8P

△C Pin Assignment
Front View

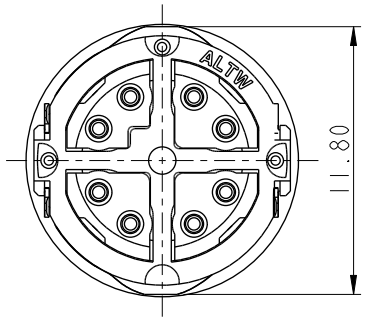

△C Note:
* RoHS Compliant
* (QC) Important dimension
* Waterproof rate: Non-Waterproof
* Connector
  Housing: Thermoplastic, Black
  Pin: Copper alloy, Gold plated
* Shield: Metal
* Mylar: PI, Amber

UNIT: mm

TOLERANCE
.X ±0.25
.XX ±0.1
.XXX ±0.05
ANGLES ±1°

TITLE: N SEN, MI2 X -SHLD, NONE RECEPTACLE, F, F, PCB SMT △C

SCALE 3:1 | SIZE A4 | SHEET 1 OF 3

REV. C | WC-REV. A.2 | (QC): Inspection item

Amphenol LTW

安費諾亮泰企業股份有限公司

ITEM NO	DRAWN BY: Sam Ho	DATE: 2019-07-09
DWG NO: △B MSXS-XXPFFT-EE0002	CHECKED BY: Fred Lee	DATE: 2019-07-09
CUSTOMER: ALTW	APPROVED BY: Fred Lee	DATE: 2019-07-09

THIS DOCUMENT IS SUBJECT TO CHANGE WITHOUT NOTICE. IT IS CONFIDENTIAL AND A PROPERTY OF Amphenol LTW. DISCLOSURE TO THIRD PARTY HAS TO BE AUTHORIZED BY Amphenol LTW.

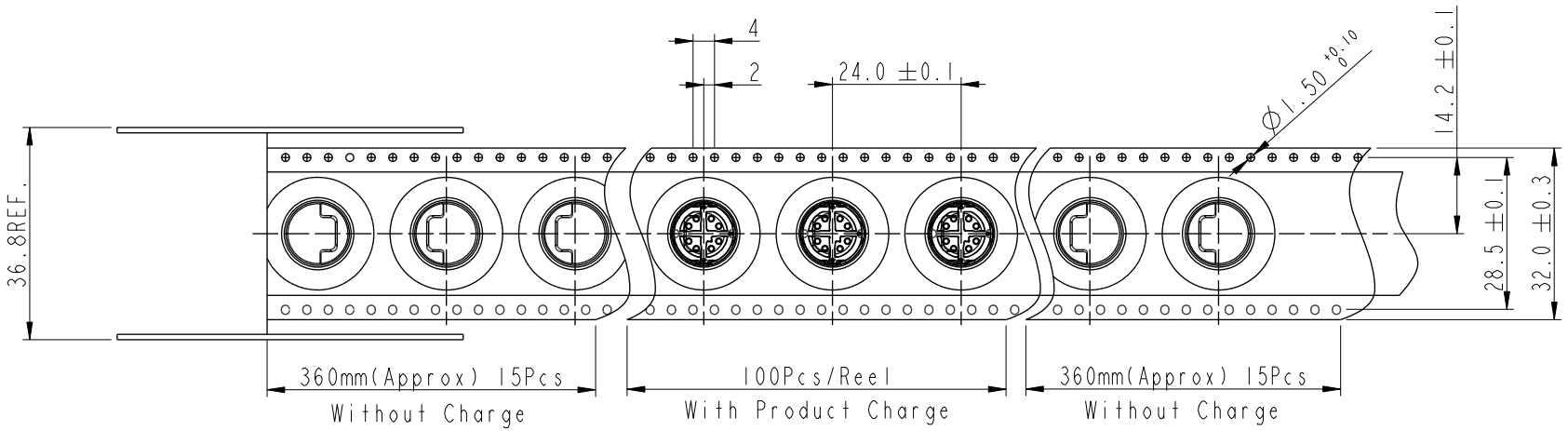

Top of Reel

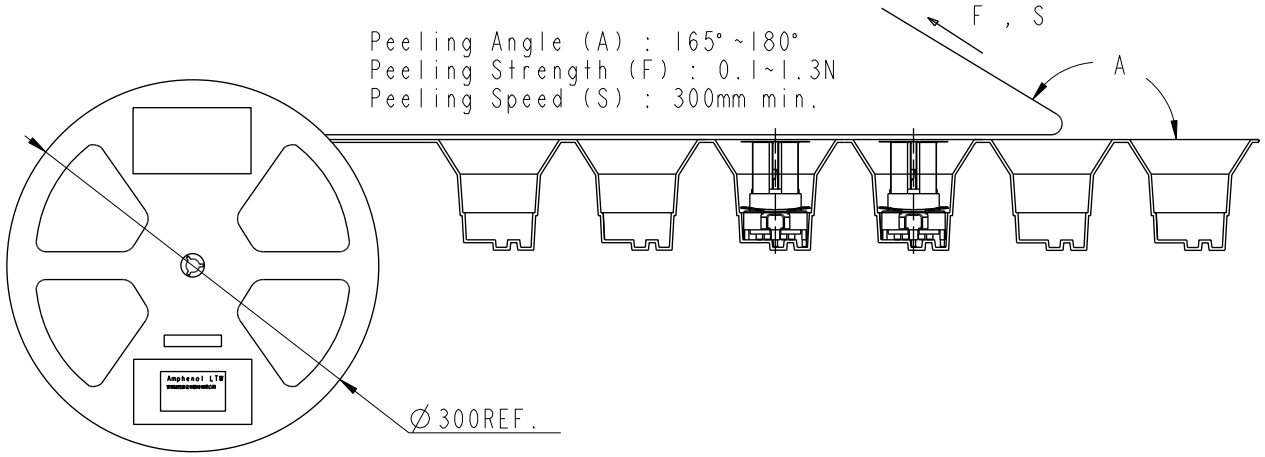

UNIT: mm	TITLE: N SEN, MI2 X -SHLD, NONE RECEPTACLE, F, F, PCB SMT △C	Amphenol LTW 安費諾亮泰企業股份有限公司	ITEM NO	DRAWN BY: Sam Ho	DATE: 2019-07-09
TOLERANCE .X ±0.25, .XX ±0.1, .XXX ±0.05, ANGLES ±1°	SCALE: 3:1 / SIZE: A4 / SHEET: 2 OF 3		DWG NO: △B MSXS-XXPFFT-EE0002	CHECKED BY: Fred Lee	DATE: 2019-07-09
	REV.: C / WC-REV.: A.2 / QC: Inspection item		CUSTOMER: ALTW	APPROVED BY: Fred Lee	DATE: 2019-07-09

THIS DOCUMENT IS SUBJECT TO CHANGE WITHOUT NOTICE. IT IS CONFIDENTIAL AND A PROPERTY OF Amphenol LTW. DISCLOSURE TO THIRD PARTY HAS TO BE AUTHORIZED BY Amphenol LTW.

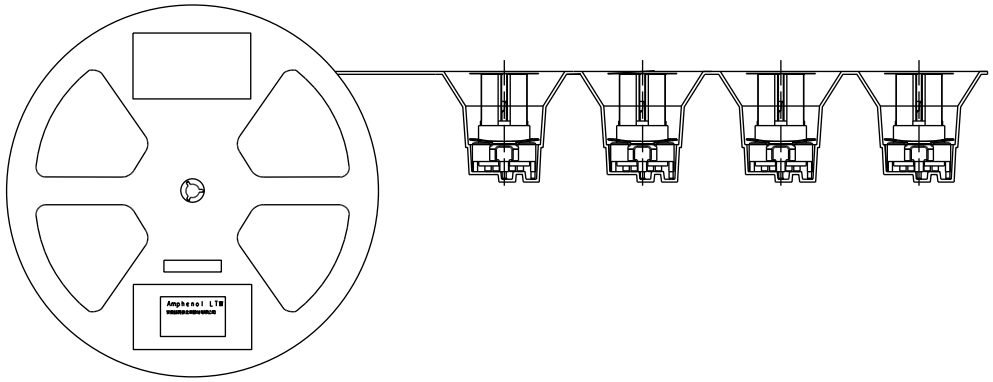

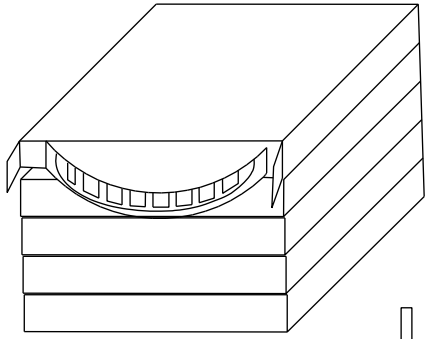

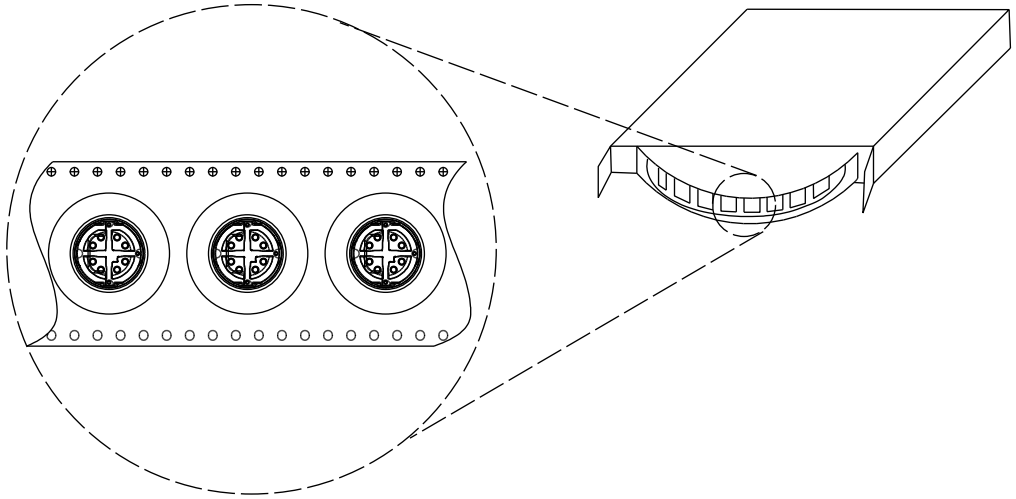

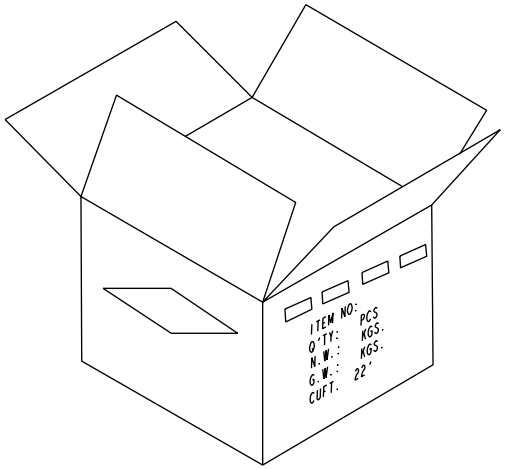

Note:
*Tape & Reel(Box) quantity: 100pcs/Reel(Box)
*Carton quantity: 500pcs/Carton

UNIT: mm	TITLE: N SEN, MI2 X -SHLD, NONE RECEPTACLE, F, F, PCB SMT (C)	Amphenol LTW 安費諾亮泰企業股份有限公司	ITEM NO	DRAWN BY: Sam Ho	DATE: 2019-07-09
TOLERANCE .X ±0.25, .XX ±0.1, .XXX ±0.05, ANGLES ±1°	SCALE: 3:1 / SIZE: A4 / SHEET: 3 OF 3		DWG NO: (B) MSXS-XXPFFT-EE0002	CHECKED BY: Fred Lee	DATE: 2019-07-09
	REV.: C / WC-REV.: A.2	(QC): Inspection item	CUSTOMER: ALTW	APPROVED BY: Fred Lee	DATE: 2019-07-09

THIS DOCUMENT IS SUBJECT TO CHANGE WITHOUT NOTICE. IT IS CONFIDENTIAL AND A PROPERTY OF Amphenol LTW. DISCLOSURE TO THIRD PARTY HAS TO BE AUTHORIZED BY Amphenol LTW.