REV.	ECN NO.	DATE	SIGN	DESCRIPTION
B	LEN1380067	2013/08/06	SAM	Change Dimension.
C	LEN1610051	2016/01/04	Jiawei	Change Dimension.
D	C191202	2019-07-16	Peng	Change The View

ALTW
CONFIDENTIAL
2019-07-16
R&D DEPT.

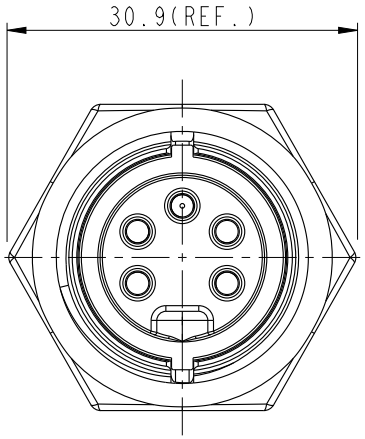

Conn. 2

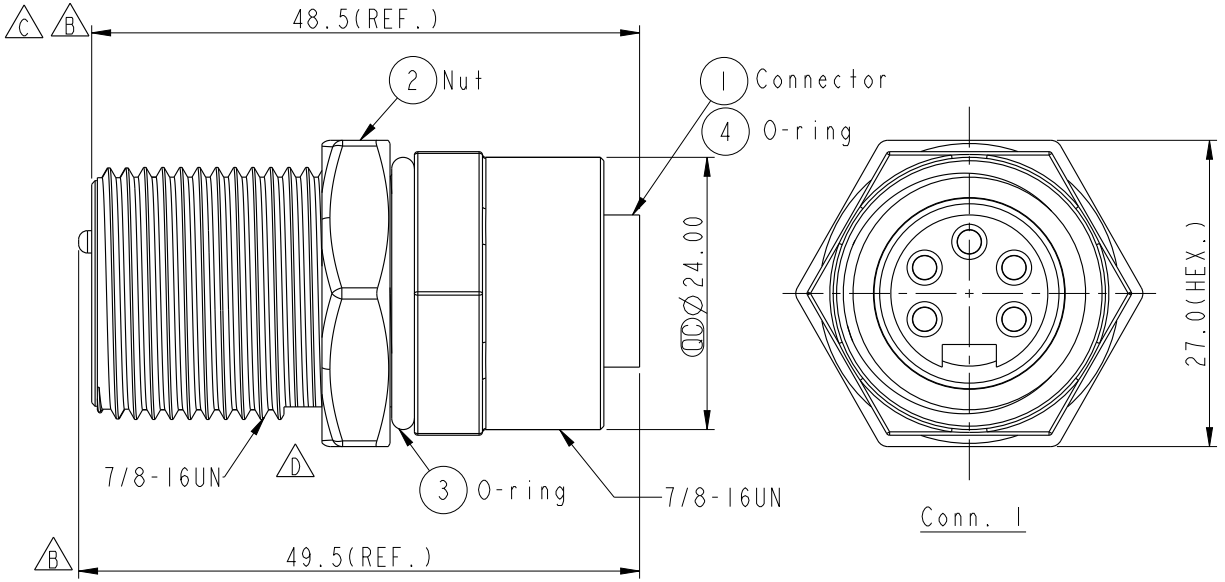

Conn. 1

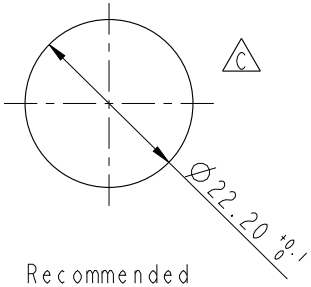

Recommended
Panel Cut-Out

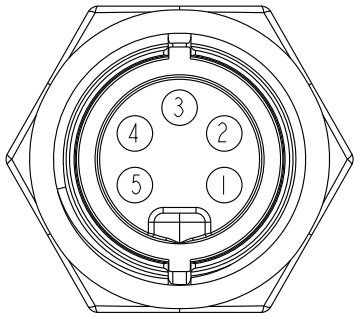

Conn. 2
Pin Assignment
Front View

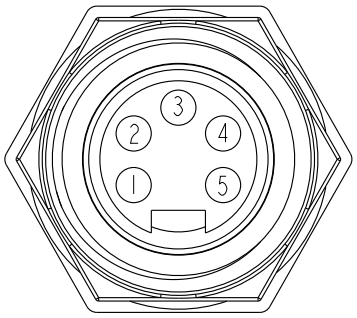

Conn. 1
Pin Assignment
Front View

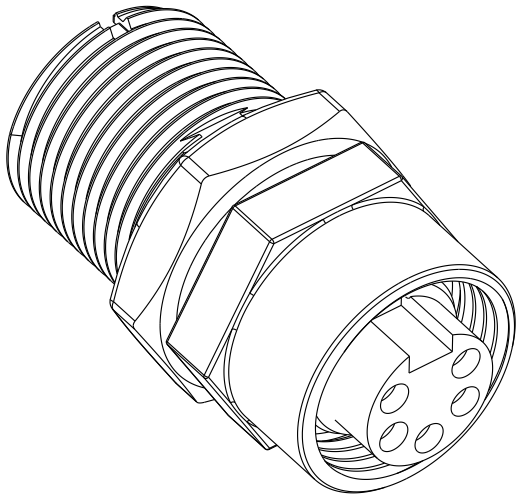

Note:
* (QC) Important Dimension.
* Waterproof Rate: IP68
  IP68: 1M Depth Of Water In 24hours.
* Conn1&2.: Nylon+GF, Black
* Pin: Copper Alloy, Gold Plated
* Shield: Brass, Nickel Plated
* Nut: Brass, Nickel Plated
* Liquid Glue: Clear
* O-ring: Black, EPDM

UNIT: mm

TOLERANCE
.X ±0.25
.XX ±0.1
.XXX ±0.05
ANGLES ±1°

TITLE: MNEA2000 MINI-C BULKHEAD
SCALE: 3:2
SIZE: A4
SHEET: 1 OF 1
REV.: D
WC-REV.: A.3
(QC): Inspection item

Amphenol LTW
安費諾亮泰企業股份有限公司

ITEM NO: MN-000505-0FM-BS001	DRAWN BY: Peng	DATE: 2019-07-16
DWG NO: MN-000505-0FM-BS001	CHECKED BY: Feng_Li	DATE: 2019-07-16
CUSTOMER: ALTW	APPROVED BY: Jerry	DATE: 2019-07-16

WI0814-03-RM01A2

THIS DOCUMENT IS SUBJECT TO CHANGE WITHOUT NOTICE. IT IS CONFIDENTIAL AND A PROPERTY OF Amphenol LTW. DISCLOSURE TO THIRD PARTY HAS TO BE AUTHORIZED BY Amphenol LTW.

Unikeyic Electronics

Global Electronic Components Distributor

Click to view pricing, inventory, delivery, and lifecycle information:

AMPHENOL LTW:

M12A-17BMMM-PL8D04 M12A04FR-12AFR-SD001 MSBP05MR-SBPMR-SB001 MSBS-05PFFR-SF7003 PWCU-04RMFS-LC7002 8-03PMMS-SH7002 AD-03BMMA-LL7001 LAD-05BFFM-QR8D01 M12A-03PMMS-SF8001 DC-05BMFB-QL8APP PWC-03BFFA-LL7002 PWM-02BFMB-TL7001 8-04PMMS-SH7002 BSU-10PMMS-SC7001 DC-05BMMA-QL8MPP FLBB-04FGMS-GCP-207 FLKD-07EGFS-GCP-001 Q8DU-05PMMS-QF8001 RCP5UM-UPG06M-TL7A01 CC-03BFMB-QL8APP DT-HCM-G3BFF-RLA60 MSAP-12BMMA-SL7001 RCP5SM-SPG06M-TL7B01 ACC-03AFFM-LL7A01 BD-03BFFA-QL8MP0 DD-18BMFA-LL7001 M12A04FL-12AFR-SDA05 DT-HCM-G3BMM-RLA60 M12A-04PFFS-SF8002 ASU-08PMMS-QC8A15