REV.	ECN NO.	DATE	SIGN	DESCRIPTION
B	LEN-7A0057	2007/10/01	Zeus	Added Note

ALTW CONFIDENTIAL 2007.10.01 R&D DEPT.

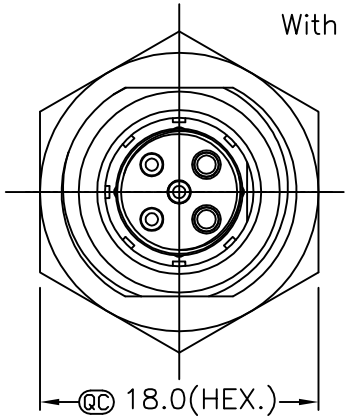

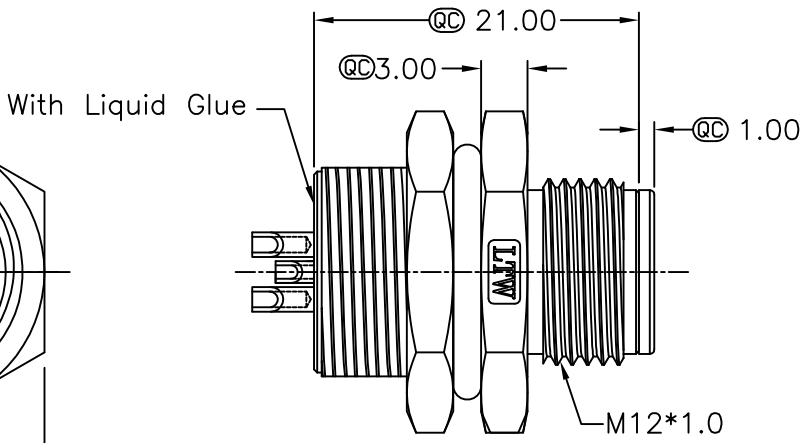

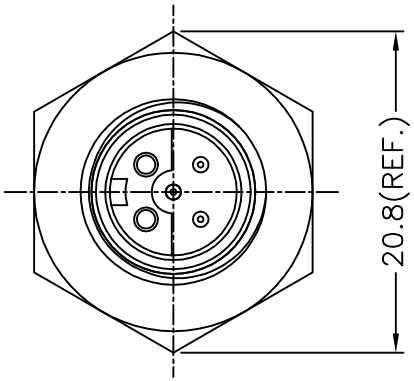

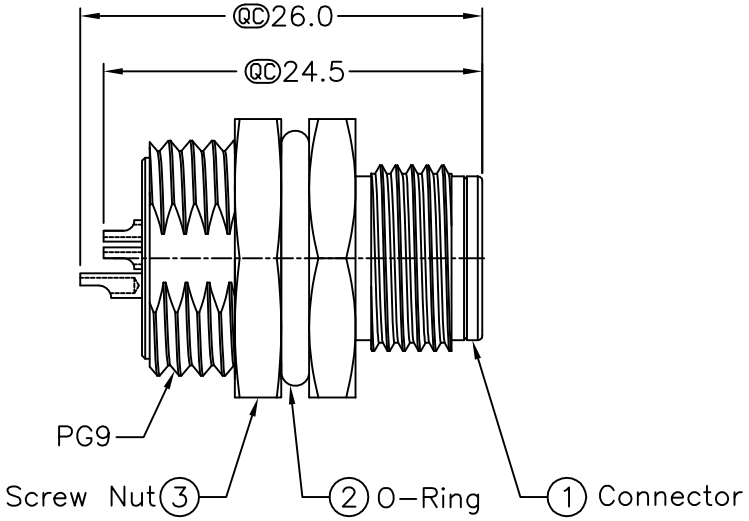

ALTW DCC. DEPT. CONFIDENTIAL 2007.10.11 ISSUED

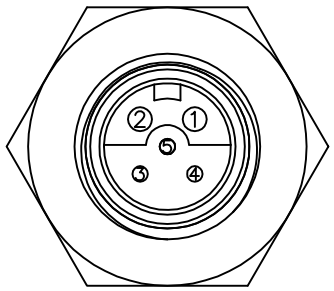

Pin Assignment
Front View

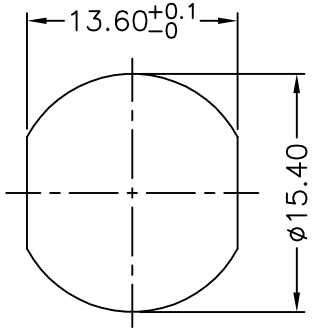

Recommended Panel Cut-Out

Note:
* QC Important Dimension.
* Waterproof Rate: IP68
* Housing: Black,Nylon+GF
* Pin: Copper Alloy, Gold Plated
* O-Ring : Black,EPDM
* Nut: Zinc Alloy,Nickel Plated
* Shield: Zinc Alloy,Nickel Plated
* Liquid Glue: Clear
* For Panel Thickness Max 4.5mm
* (B) Nut Torque: 4-6 kgf.cm

UNIT:mm	TITLE: M12 Conn Panel Screw 5Pin M Conn C Pin	Amphenol LTW 安費諾亮泰企業股份有限公司	ITEM NO: 12-05PMIS-SH8001	DRAWN BY: Zeus Bautista	DATE: 2007/10/01
TOLERANCE .X ±0.25, .XX ±0.1, .XXX ±0.05, ANGLES ±1°	SCALE: Free; SHEET: 1 OF 1		DWG NO: 12-05PMIS-SH8001	CHECKED BY: Alan MJ Sundo	DATE: 2007/10/02
	REV: B; SIZE: A4; QC :Inspection Item		CUSTOMER: ALTW	APPROVED BY: Cloud	DATE: 2007/10/04

THIS DOCUMENT IS SUBJECT TO CHANGE WITHOUT NOTICE. IT IS CONFIDENTIAL AND A PROPERTY OF Amphenol LTW. DISCLOSURE TO THIRD PARTY HAS TO BE AUTHORIZED BY Amphenol LTW.