B	B81514D**-**P*

REVISIONS			
SYM	DESCRIPTION	DATE	APPROVED
NONE	NEW RELEASE PER E.O. 68683	11-24-71	DLL
A	REVISED PER E.O. 83027	10-17-77	R.H.
B	REVISED PER E.O. A1811	2-16-84	Thomas

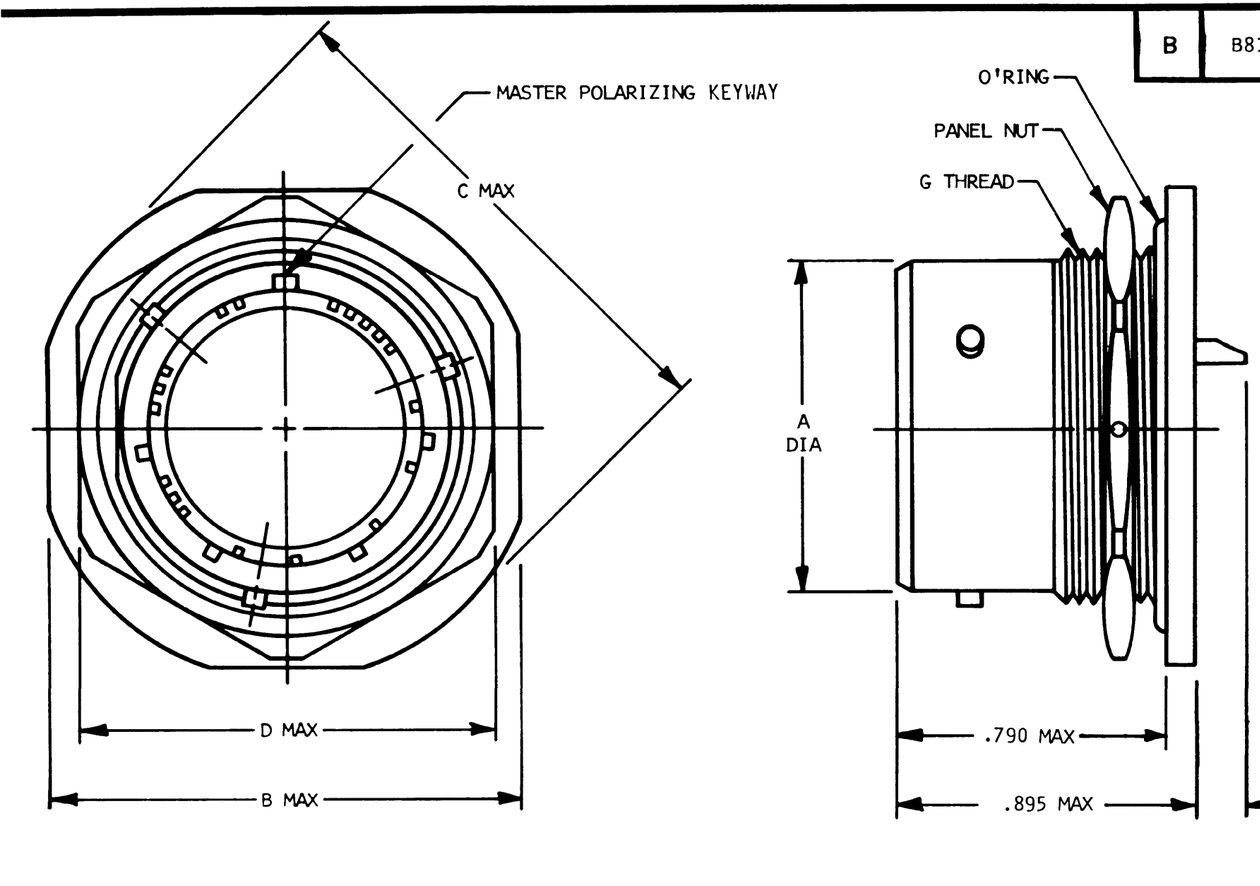

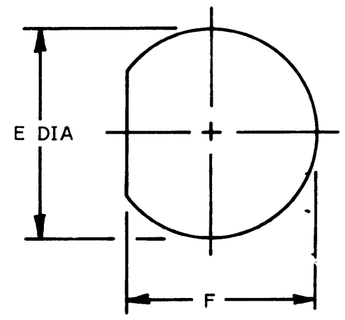

PANEL CUTOUT

.125 MAX PANEL THICKNESS

PART NUMBER	A DIA. ±.003	B MAX.	C MAX.	D MAX.	E ±.005	F ±.005	G THREAD
B81514D08-**P*	.550	.989	1.072	.882	.635	.605	5/8-20UN-2A
B81514D10-**P*	.675	1.114	1.197	.944	.760	.730	3/4-20UNEF-2A
B81514D14-**P*	.925	1.401	1.510	1.194	1.010	.980	1-20UNEF-2A
B81514D16-**P*	1.051	1.526	1.635	1.319	1.135	1.105	1-1/8-20UN-2A
B81514D18-**P*	1.175	1.651	1.745	1.444	1.260	1.230	1-1/4-20UN-2A

5. APPLICABLE DEUTSCH DRAWINGS:
   51500 - INSERT ARRANGEMENTS & SHELL KEYING

4. MATERIAL: SHELL - COLD ROLL PER QQ-S-637
   CONTACTS - PER MIL-C-81511
   INSERTS - COMPRESSION GLASS, SILICONE BASE ELASTOMER

3. FINISH: SHELL - TIN PER MIL-T-10727 OVER NICKEL PER QQ-N-290
   CONTACTS - GOLD PER MIL-G-45204 TYPE 11, CLASS 2 OVER NICKEL PER QQ-N-290

2. THIS CONNECTOR WILL INTERMATE WITH MIL-C-81511 SERIES 2

OTE: 1. THIS CONNECTOR WILL MEET THE APPLICABLE PERFORMANCE AND ENVIRONMENTAL REQUIREMENTS OF MIL-C-81511 CLASS D

	SIGNATURE & DATE
DR	D Latham 11-24-71
CHK	[signature] 11-30-71
PE	[signature]
APPD	
SCALE	WT

RECEPTACLE HERMETIC
SINGLE HOLE MOUNT
BAYONET COUPLING CONNECTOR
SOLDER CUP TERMINATION
MIL-C-81511 INTERMATING
SHORT SHELL SERIES

ENVELOPE

CP | MATL. CODE

The Deutsch Company
ELECTRONIC COMPONENTS DIVISION
Municipal Airport
Banning, California

B | B81514D**-**P*

DWG SIZE | CODE 11139 | SHEET 1 OF 1