REVISION					
ZONE	LTR	ECN	DESCRIPTION	DATE	APPROVED
	A1		REVISED PER ECO-11-005139	28MAR11	HMR

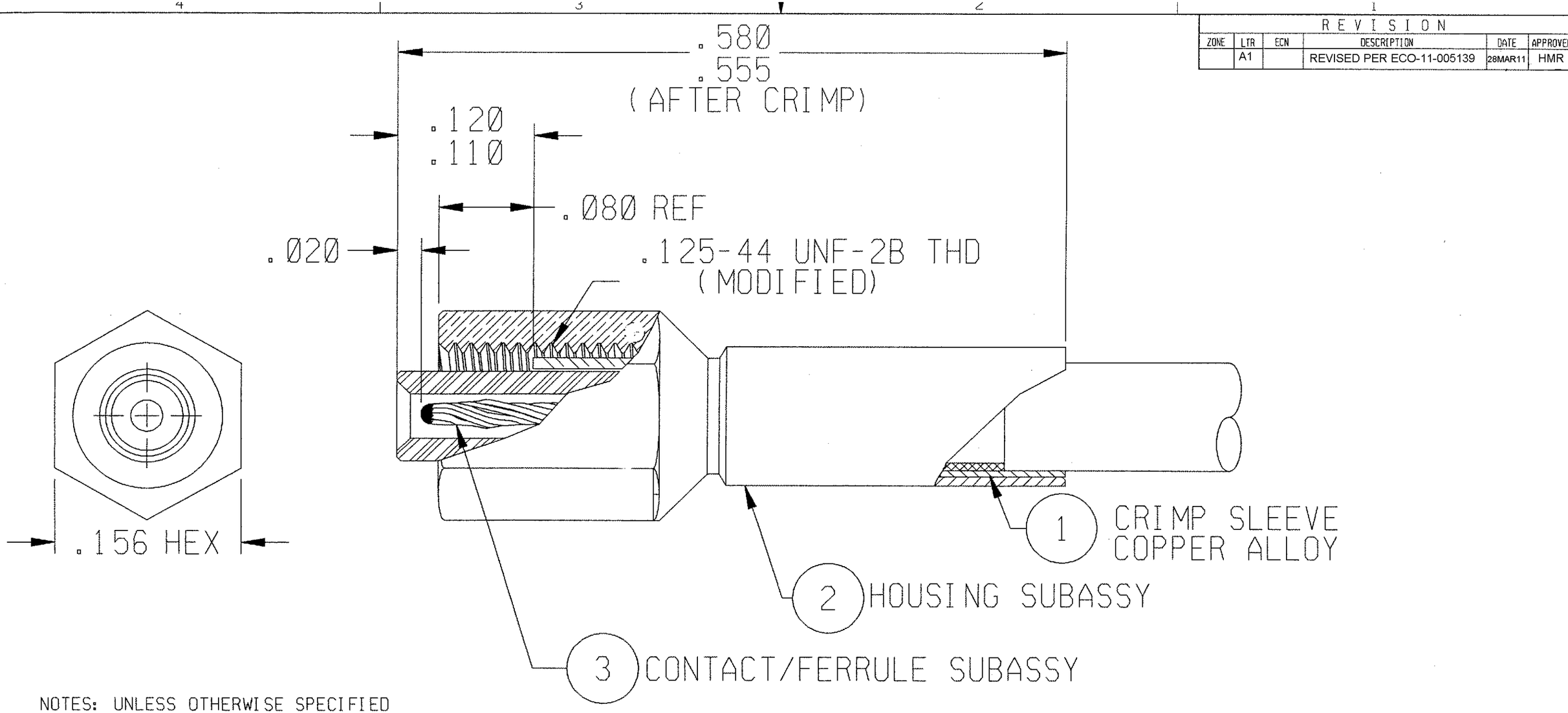

NOTES: UNLESS OTHERWISE SPECIFIED

1. ALL METALLIC PARTS ARE GOLD PLATED PER MIL-G-45204, TYPE II, GRADE C, CLASS 1
2. MATES WITH ALL LEPRA/CON 141 SCREW-ON SERIES JACKS AND RECEPTACLES.
3. FOR ASSEMBLY INSTRUCTION SEE RF-ASMβ-12.
4. CABLE ACCEPTANCE DIMENSIONS:

CENTER CONDUCTOR DIA	.012
DIELECTRIC DIA	.034
SHIELD DIA	.054
JACKET DIA	.080

TE CONNECTIVITY Dwg 3-1532145-3
Micro P/N 142-0000-0000

UNLESS OTHERWISE SPECIFIED DIMENSIONS ARE IN INCHES. TOLERANCE ARE: FRACTIONS ± 1/8 DECIMALS .XX ± .XXX ± .010 ANGLES ±2°	APPROVALS		TE Connectivity	
	SIGNATURE	DATE	STRAIGHT PLUG CONNECTOR ASSY	PROD CODE 946
	DRAWN MEL F. CAMPOS	06/13/96		CODE COM
MATERIAL:	CHECKED			
	PRO. ENG.	4/24/96		
	APPROVED			
FINISH:			SIZE B / CODE IDENT NO. 98278 / DRAWING NO. 3-1532145-3	
			SCALE: NONE	SHEET 1 OF 1