REVISIONS			
SYM	DESCRIPTION	DATE	APPROVAL
NONE	ECO 35692	1-7-66	P.S.
A	CHANGE PER ECO 45106	9-5-7	ZC

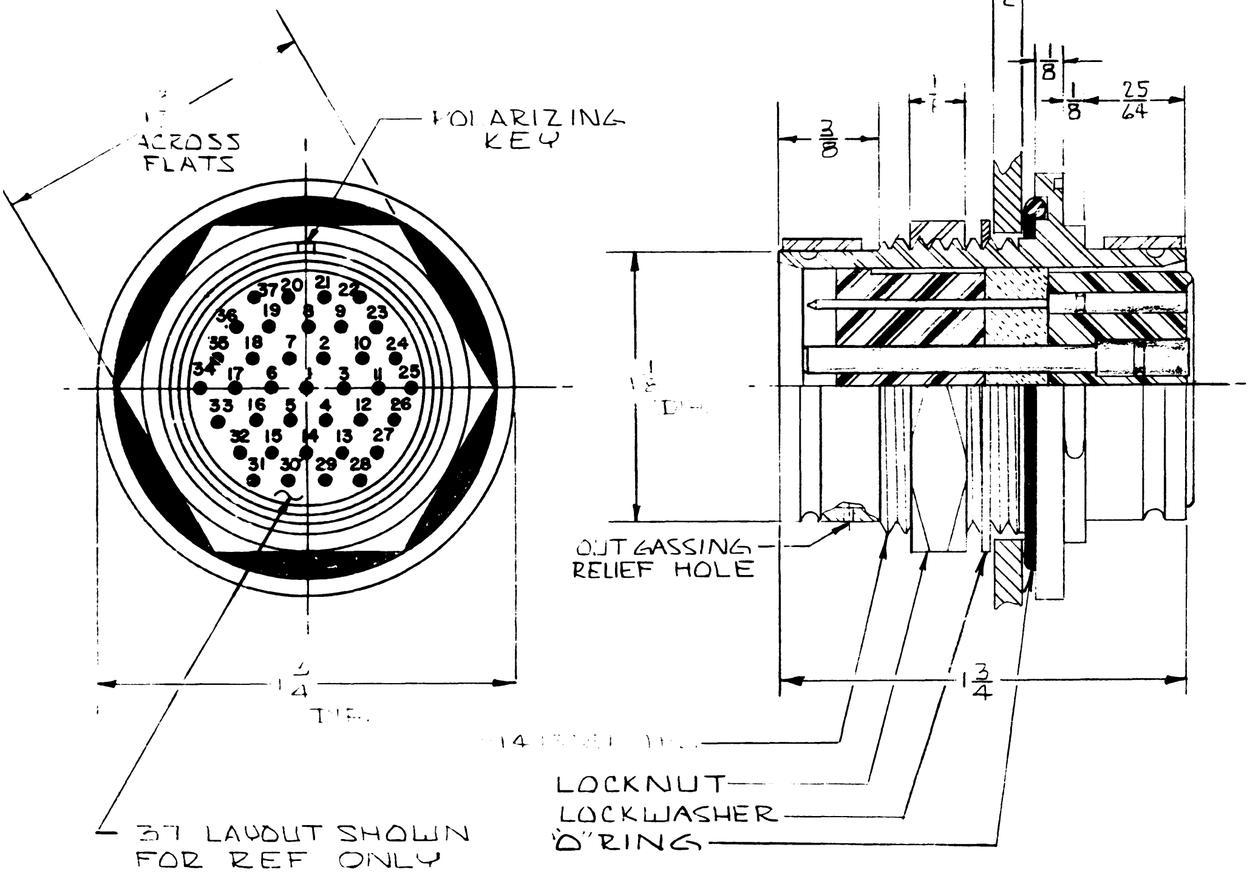

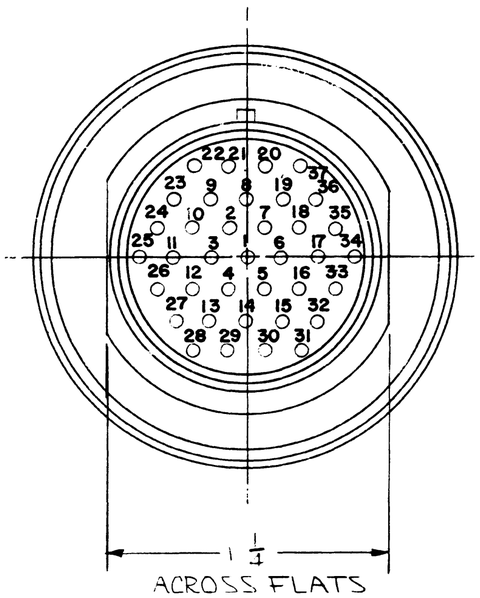

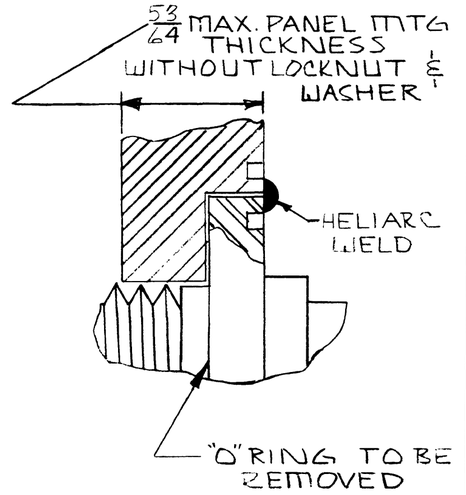

OPTIONAL MTG DETAIL

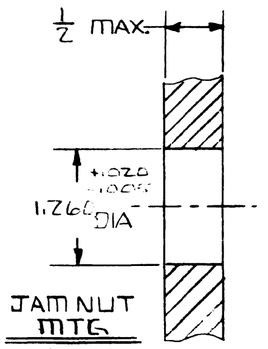

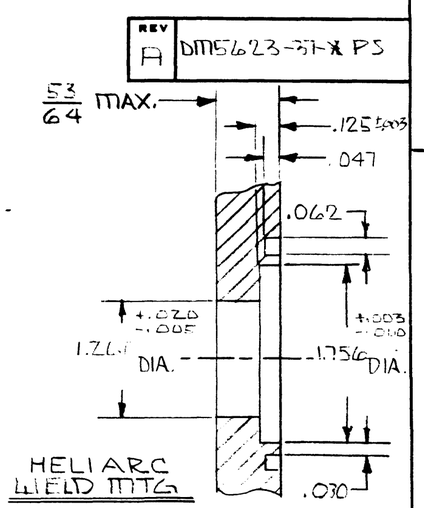

RECOMENDED PANEL MTG HOLES

4. FINISH - SHELL & LOCKNUT - ELECTRO POLISH
CONTACTS - GOLD PLATED
3. MATERIALS - SHELL & LOCKNUT - STAINLESS STEEL
CONTACTS - NICKEL ALLOY
INSERTS - COMPRESSION GLASS HERMETICALLY SEALED &
RESILIENT ELASTOMER - FOR INTERFACIAL SEAL
2. CONTACT IDENT. IS IN CONTRASTING COLOR TO INSERTS
1. INSERTS ARE CONTINUOUS DIELECTRIC
NOTES:

ITEM	QTY	PART NUMBER	DESCRIPTION	NEXT ASSY	USED ON
		LIST OF MATERIAL		APPLICATION	

TOLERANCES UNLESS OTHERWISE SPECIFIED
FRACTIONS: ±.015 DECIMALS: ±.005
ANGLES: ±0° 30' 0"
TIR .010
PARTS TO BE FREE OF BURRS AND SHARP EDGES

MATERIAL

FINISH

	SIGNATURE & DATE
DR	12-23-65
CHK	
PE	
APPD	

— ENVELOPE —
RECEPTACLE, CONNECTOR, ELECTRICAL, HERMETIC, SINGLE HOLE MTG., MINIATURE, QUICK DISCONNET, TBF,

SCALE NONE | WT

The Deutsch Company
ELECTRONIC COMPONENTS DIVISION
Municipal Airport • Banning, California

C | DM5623-37-*PS
DWG SIZE | CODE 11139 | SHEET 1 OF 1