SPECIFICATION CONTROL DRAWING			0022S2662
CHEMINAX	100 OHM, AWG 22, 19 STRANDS OF AWG 34, TWINAXIAL CABLE, OUTER SPACE USE	Date	1-10-12
		Revision	A

THIS SPECIFICATION SHEET FORMS A PART OF THE LATEST ISSUE OF RAYCHEM SPECIFICATION 1200.

CONSTRUCTION DETAILS

DIMENSIONS ARE NOMINAL VALUES IN INCHES UNLESS OTHERWISE DESIGNATED.

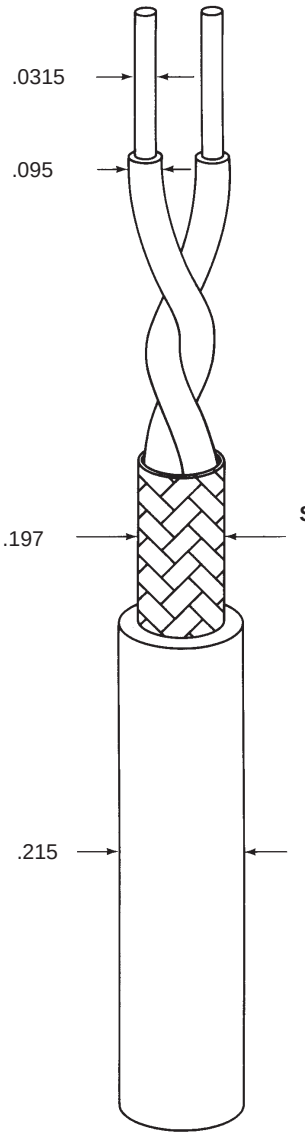

CONDUCTORS
AWG 22, 19 Starnds of AWG 34, Silver-Coated Copper

DIELECTRICS
Radiation-Crosslinked, Modified ETFE (Dual Extruded)
Colors - Light Blue/White

SHIELD
Flat, .0015 Strand Thickness Silver-Coated Copper

JACKET
Radiation-Crosslinked, Modified ETFE

Outer jacket color will be white (designated by a "-9" appended to the part number, e.g. 0022S2662-9) unless otherwise specified.

Designate outer jacket color with a dash number in accordance with MIL-STD-681. Other codes and suffixes may be added to the part number, as necessary, to capture any additional requirements imposed by the purchase order.

ELECTRICAL CHARACTERISTICS

CHARACTERISTIC IMPEDANCE	100 ± 10 ohms, Method C at 1 MHz
MUTUAL CAPACITANCE	18 pF/ft. (nominal)

ADDITIONAL REQUIREMENTS

COMPONENT WIRE PRIOR TO CABLING (Test Procedures per SAE AS22759)

CROSSLINKING PROOF TEST	300 ± 3°C for 1 hour, 1.00 inch mandrel, 1.00 lb., 2.5 kV dielectric test
INSULATION (DIELECTRIC) (total insulation)	
ELONGATION	50% (minimum)
TENSILE STRENGTH	5000 lbf/in^2 (minimum)
INSULATION FLAWS	
SPARK TEST	3.0 kV (rms)
IMPULSE TEST	8.0 kV (peak)
INSULATION RESISTANCE	5000 megohms for 1000 ft. (minimum)
LOW TEMPERATURE-COLD BEND	-65 ± 3°C for 4 hours, .750 inch mandrel, 1.00 lb., 2.5 kV dielectric test
SHRINKAGE	200 ± 3°C for 1 hour, .125 inch (maximum) in 12 inches

FINISHED CABLE
(Test Procedures per NEMA WC 27500, unless otherwise specified)

BLOCKING	200°C for 6 hours
CROSSLINKED VERIFICATION	300 ± 5°C for 6 hours, 6.00 inch mandrel
FLAMMABILITY (Method B of Spec 1200)	3 seconds (maximum); 3 inches (maximum); no flaming of facial tissue
JACKET	
ELONGATION	50% (minimum)
TENSILE STRENGTH	5000 lbf/in^2 (minimum)
JACKET FLAWS	
SPARK TEST	1.0 kV (rms)
IMPULSE TEST	6.0 kV (peak)
JACKET THICKNESS	.009 inch (nominal)
LOW TEMPERATURE-COLD BEND	-55 ± 5°C for 4 hours, 6.00 inch mandrel
SHIELD COVERAGE	90% (minimum)
VOLTAGE WITHSTAND (DIELECTRIC)	1500 volts (rms)
WEIGHT	23.5 lbs/1000 ft. (nominal)

OUTER SPACE REQUIREMENTS

RADIATION RESISTANCE	500 megarads/6.50 inch mandrel 1.0 kV dielectric test
VACUUM STABILITY	
TOTAL MASS LOSS (TML)	1.00% (maximum)
VOLATILE CONDENSABLE MATERIAL (VCM)	0.10% (maximum)
WEIGHT LOSS (Per Raychem Spec 55/):	0.45% (maximum)

Users should evaluate the suitability of this product for their application. Specifications are subject to change without notice. Tyco Electronics Corporation also reserves the right to make changes in materials or processing, which do not affect compliance with any specification, without notification to Buyer.

Cheminax, Raychem, TE Connectivity, TE connectivity (logo) and TE (logo) are trademarks.

Raychem Wire & Cable
501 Oakside Avenue
Redwood City, California 94063-3800
1-800-227-8816 Fax: 1-650-361-6297

THIS SPECIFICATION SHEET TAKES PRECEDENCE OVER DOCUMENTS REFERENCED HEREIN. REFERENCED DOCUMENTS SHALL BE OF THE ISSUE IN EFFECT ON DATE OF INVITATION FOR BID.

© 2012 Tyco Electronics Corporation, All rights reserved.