| F | DBA54H-*-*P* |
|---|---|

| REVISIONS | | | |
|---|---|---|---|
| SYM | DESCRIPTION | DATE | APPROVED |
| F | CHANGE PER E.O. 75654 | 11-6-72 | DLL |

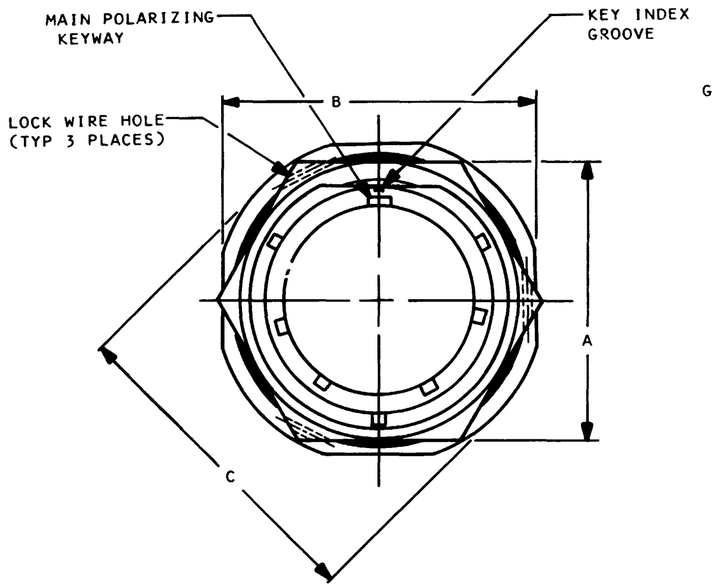


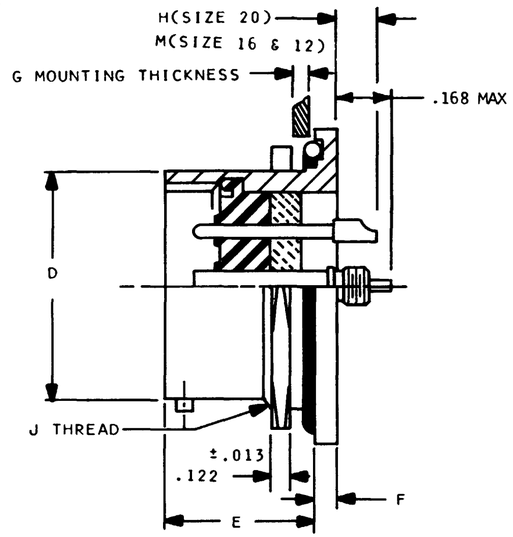


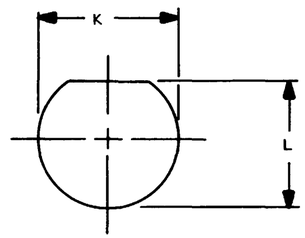


RECOMMENDED MOUNTING HOLE

| SHELL SIZE | PART NUMBER | A±.015 | B±.015 | C±.015 | D DIA +.001 -.005 | E±.008 | F±.008 | G MIN. | G MAX. | H±.030 | J THREAD | K +.010 -.000 | L +.010 -.000 | M±.030 | APPROX WT IN LBS. |
|---|---|---|---|---|---|---|---|---|---|---|---|---|---|---|---|
| 8 | DBA54H- 8-*P* | .750 | .938 | 1.062 | .473 | .699 | .105 | .062 | .187 | .104 | 9/16-24 UNEF | .572 | .537 | .174 | |
| 10 | DBA54H-10-*P* | .875 | 1.062 | 1.187 | .590 | .699 | .105 | .062 | .187 | .104 | 11/16-24 UNEF | .697 | .661 | .174 | .0579 |
| 12 | DBA54H-12-*P* | 1.062 | 1.250 | 1.375 | .750 | .699 | .105 | .062 | .187 | .104 | 7/8-20 UNEF | .895 | .824 | .174 | .0869 |
| 14 | DBA54H-14-*P* | 1.188 | 1.375 | 1.500 | .875 | .699 | .105 | .062 | .187 | .104 | 1-20 UNEF | 1.010 | .948 | .174 | .1045 |
| 16 | DBA54H-16-*P* | 1.312 | 1.500 | 1.625 | 1.000 | .699 | .105 | .062 | .187 | .104 | 1 1/8-18 UNEF | 1.135 | 1.072 | .174 | .1285 |
| 18 | DBA54H-18-*P* | 1.438 | 1.625 | 1.750 | 1.125 | .699 | .105 | .062 | .187 | .104 | 1 1/4-18 UNEF | 1.260 | 1.197 | .174 | .1518 |
| 20 | DBA54H-20-*P* | 1.562 | 1.812 | 1.937 | 1.250 | .763 | .138 | .062 | .250 | .069 | 1 3/8-18 UNEF | 1.385 | 1.322 | .139 | .2071 |
| 22 | DBA54H-22-*P* | 1.688 | 1.938 | 2.062 | 1.375 | .763 | .138 | .062 | .250 | .069 | 1 1/2-18 UNEF | 1.510 | 1.447 | .139 | .2367 |
| 24 | DBA54H-24-*P* | 1.812 | 2.062 | 2.187 | 1.500 | .794 | .138 | .062 | .250 | .069 | 1 5/8-18 UNEF | 1.635 | 1.572 | .139 | .2481 |

4. MATERIAL:
SHELL-STAINLESS STEEL
CONTACTS, PIN- HIGH NICKEL-IRON
INSERTS- COMPRESSION GLASS ELASTOMER

"O" RING- SILICONE

3. FINISH:
SHELL-ELECTRO POLISH
CONTACTS-GOLD PLATED

2. CONTACT IDENTIFICATION IS IN CONTRASTING COLOR TO INSERTS.

**NOTE:** 1. FOR AVAILABLE CONTACT ARRANGEMENTS AND ALTERNATE INSERT POSITIONS, SEE PAGE 38500-P IN DBA SECTION OF CATALOG.

| | SIGNATURE & DATE |
|---|---|
| DR | LEFTWICH 7-8-69 |
| CHK | |
| PE | |
| | |
| APPD | |
| SCALE NONE | WT |

RECEPTACLE, CONNECTOR, HERMETIC, BAYONET COUPLING, JAM-NUT MOUNTING

ENVELOPE

CP | MATL CODE

**The Deutsch Company**
ELECTRONIC COMPONENTS DIVISION
*Municipal Airport*
*Banning, California*

| DWG SIZE | CODE 11139 | DBA54H-*-*P* SHEET 1 OF 1 |
|---|---|---|
| B | | |