Thermofit® Molded Parts
Specification Control Drawing
Limited Distribution

Part Number : 214A052-25/225
Description : Boot, Rectangular, Subminiature, Straight

NOTES

1. All dimensions are in inches [millimeters]
2. Dimensions appearing in table are as follows:
   a - As Supplied
   b - After Unrestricted Recovery
3. Coating is optional. As supplied dimensions appearing in table are for uncoated parts. When coating is added, entry diameters will be reduced by .06 max.

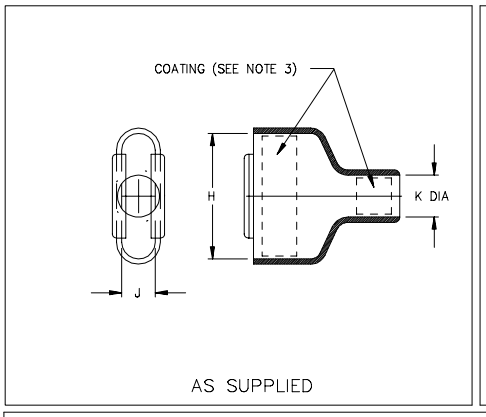

AS SUPPLIED

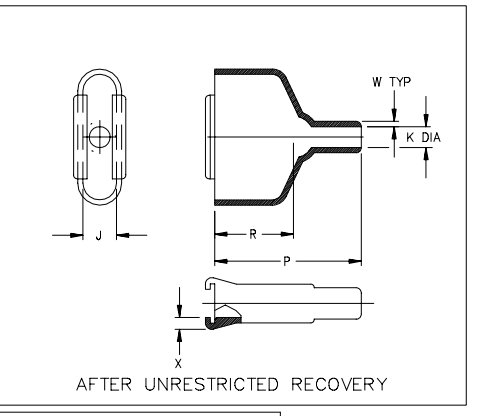

AFTER UNRESTRICTED RECOVERY

TABLE OF DIMENSIONS

PART NUMBER	H		J		K		P	R	W	X
	±5% a	±5% b	±5% a	±5% b	Min a	Max b	±10% b	±10% b	±20% b	±20% b
214A052-25/225	2.28 [57,9]	2.28 [57,9]	.54 [13,7]	.54 [13,7]	.75 [19,1]	.42 [10,7]	2.40 [61,0]	1.25 [31,8]	.04 [1,0]	.12 [3,0]

If this document is printed it becomes uncontrolled.
Check for the latest revision.

Raychem
RAYCHEM CORPORATION
300 CONSTITUTION DRIVE
MENLO PARK, CALIFORNIA 94025

Revision : B
Date : 10/8/97

Part Number : 214A052-25/225
Description : Boot, Rectangular, Subminiature, Straight

Thermofit® Molded Parts
Specification Control Drawing
Limited Distribution

Part Number : 214A052-25/225
Description : Boot, Rectangular, Subminiature, Straight

COMPATABILITY CHART

MATERIAL DASH NO.	MATERIAL DESCRIPTION	RT SPEC	COATING SLASH NO.	COATING S NO.	COATING DESCRIPTION
-25	Elastomer, Fluid Resistant	RT-1325	/225	S-1026	Adhesive

ORDERING INFORMATION

214A052 -25 -XX /225

- 214A052 — Base part number
- -25 — Material dash number (See Compatability Chart)
- -XX — Modification number (If necessary, see front of scd binder for a complete list)
- /225 — Adhesive slash number (If necessary, see Compatability Chart)

THIS DRAWING IS SUBJECT TO CHANGE WITHOUT NOTICE; CONSULT YOUR NEAREST FIELD REPRESENTATIVE FOR CURRENT REVISION

Raychem
RAYCHEM CORPORATION
300 CONSTITUTION DRIVE
MENLO PARK, CALIFORNIA 94025

Revision : B
Date : 10/8/97

Part Number : 214A052-25/225
Description : Boot, Rectangular, Subminiature, Straight

CAD FILE MP97157