SPECIFICATION CONTROL DRAWING **5026A1664**

CHEMINAX

50 OHM, AWG 26, 19 STRANDS OF AWG 38, TWIN CONDUCTOR CABLE

Date: 3-15-99
Revision: B

THIS SPECIFICATION SHEET FORMS A PART OF THE LATEST ISSUE OF RAYCHEM SPECIFICATION 1200.

CONSTRUCTION DETAILS

DIMENSIONS ARE NOMINAL VALUES IN INCHES UNLESS OTHERWISE DESIGNATED.

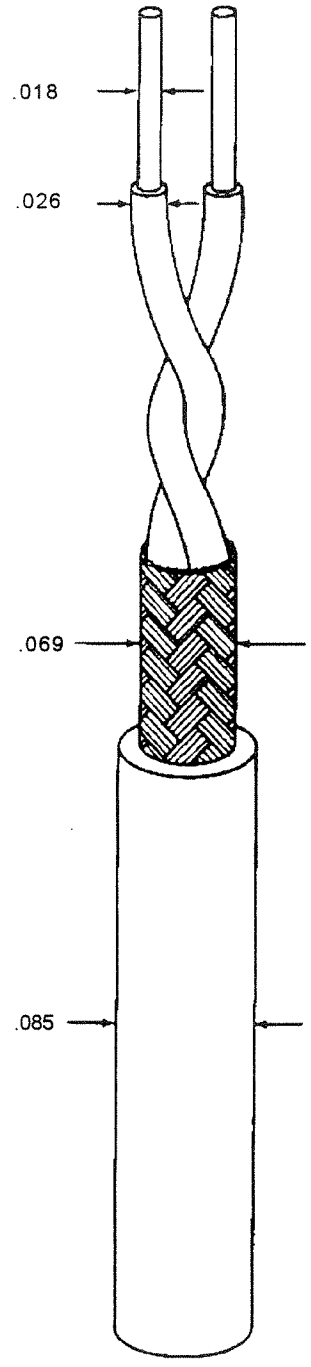

CONDUCTORS
AWG 26, 19 Strands of AWG 38, Silver-Coated High Strength Copper Alloy

DIELECTRICS
Radiation-Crosslinked, Modified ETFE
Color - Light Blue/White

SHIELD
AWG 38, Silver-Coated Copper

JACKET
Radiation-Crosslinked, Modified ETFE

Outer jacket color will be white (designated by a "-9" appended to the part number, e.g., 5026A1664-9) unless otherwise specified.

Designate outer jacket color with a dash number in accordance with MIL-STD-681

ELECTRICAL CHARACTERISTICS

CHARACTERISTIC IMPEDANCE	50 ± 7 ohms, Balanced Impedance, Method C at 1 MHz
CAPACITANCE - MUTUAL	41.5 pF/ft. (maximum)
ATTENUATION	2.5 dB/100 ft. (nominal) at 1 MHz 8.3 dB/100 ft. (nominal) at 10 MHz

ADDITIONAL REQUIREMENTS

COMPONENT WIRE PRIOR TO CABLING (Test Procedure Per MIL-W-22759)

ACCELERATED AGING (Per MIL-W-22759 Life Cycle Procedure)	300 ± 3°C for 1 hour, .500 inch mandrel, .125 lb. 2.5 kV dielectric test
LOW TEMPERATURE-COLD BEND	-65 ± 2°C for 4 hours, .500 inch mandrel, .500 lb. 2.5 kV dielectric test
SHRINKAGE	200 ± 3°C for 1 hour, .125 inch (maximum) in 12.0 inches
INSULATION RESISTANCE	5000 megohms for 1000 ft. (minimum)
INSULATION (DIELECTRIC)	
TENSILE STRENGTH	5000 lbf/in² (minimum)
ELONGATION	50% (minimum)
IMPULSE DIELECTRIC TEST	8.0 kV (peak), 100% test

FINISHED CABLE (Test Procedure Per MIL-DTL-27500)

BLOCKING	200°C for 6 hours
LOW TEMPERATURE-COLD BEND	-55 ± 5°C for 4 hours, 3.00 inch mandrel
CROSSLINKED VERIFICATION	300 ± 5°C for 6 hours, 3.00 inch mandrel
FLAMMABILITY (Per Raychem Spec 55A, Procedure 1)	3 seconds (maximum); 3.0 inches (maximum); no flaming of facial tissue
JACKET FLAWS	
SPARK TEST	1000 volts, 60 Hz, 100% test
IMPULSE TEST	6.0 kV (peak)
JACKET	
TENSILE STRENGTH	5000 lbf/in² (minimum)
ELONGATION	50% (minimum)
SHIELD COVERAGE	90% (minimum)
JACKET THICKNESS	.008 inch thick (nominal)
VOLTAGE WITHSTAND (DIELECTRIC)	1000 volts (rms) (minimum)

The length of lay shall be .75 inches (nominal)

WEIGHT	6.7 lbs/1000 ft. (nominal)

Raychem

Raychem Corporation
300 Constitution Drive
Menlo Park, California 94025
1-800-2 Raychem Fax 1-650-361-6297

THIS SPECIFICATION SHEET TAKES PRECEDENCE OVER DOCUMENTS REFERENCED HERIN. REFERENCE DOCUMENTS SHALL BE OF THE ISSUE IN EFFECT ON DATE OF INVITATION FOR BID