REV	
NC	HD10-9-96P*-B025

REVISIONS			
SYM	DESCRIPTION	DATE	APPROVED
NC	NEW RELEASE PER E.O. P19602	7-31-07	RDR

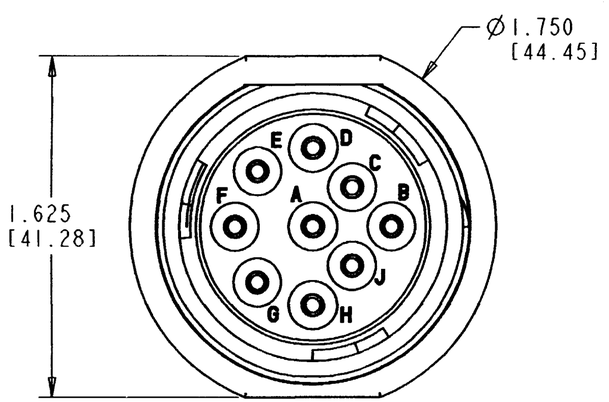

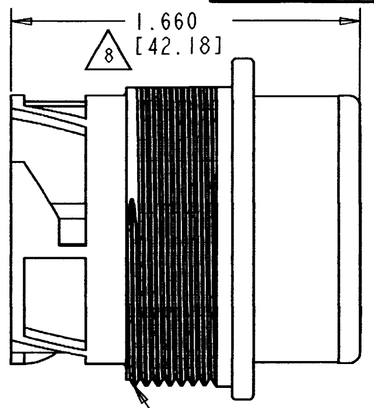

1.500-18 UNEF THREAD

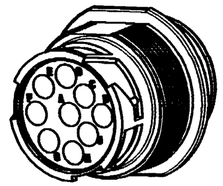

3D VIEW

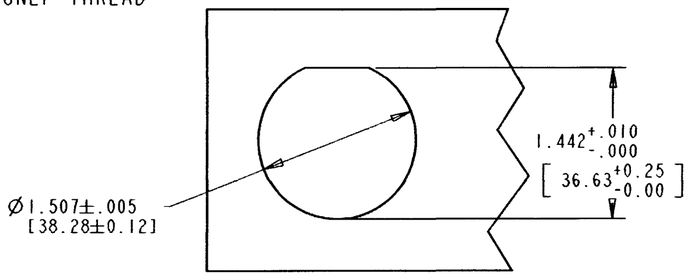

RECOMMENDED PANEL CUTOUT

4

10. * = SEAL TYPE ('BLANK', E)

9. MATERIAL: SHELL: PLASTIC; SEAL: RUBBER.

8. OVERALL DIMENSION DOES NOT INCLUDE RUBBER GROMMET.

7. THIS RECEPTACLE MATES WITH HD16-9-96S*-**** PLUG
(* = SEAL TYPE, **** = ALL MODIFICATIONS).

6. FOR CONTACTS AND WIRES PERFORMANCE AND APPLICATION CHARACTERISTICS SEE ENVELOPE DRAWING 0425-015-0000.
THIS RECEPTACLE USES PIN CONTACTS ONLY.

5. USE PANEL NUT P/N 2411-002-1805 AND LOCK WASHER P/N 2414-002-1886.
PANEL NUT MOUNTING TORQUE: 45-55 IN-LB [5.1-6.1 N-M].

4. RECOMMENDED PANEL THICKNESS: .062[1.57] TO .188[4.77].

3. ALL DIMENSIONS ARE IN INCHES [MILLIMETERS].
DIMENSION TOLERANCE: ±.025[±.63]. UNLESS OTHERWISE SPECIFIED.

2. THIS CONNECTOR WILL ACCOMMODATE THE FOLLOWING WIRE INSULATION DIAMETERS:

SEAL TYPE	MINIMUM O.D.	MAXIMUM O.D.
NORMAL (BLANK)	.100 [2.54]	.150 [3.81]
E	.053 [1.35]	.120 [3.05]

NOTES:

1. CONSULT FACTORY FOR ELECTRICAL AND MATERIAL SPECIFICATIONS.

	SIGNATURE & DATE
DR	A. MALAGON 31JUL07
CHK	K. Mesaya 7/31/07
PE	S Beard 7-31-07
APPD	R. Reed 9-5-07
SCALE	NONE WT

RECEPTACLE CONNECTOR
ARRANGEMENT 9-96
D-HOLE PANEL MOUNT
COLOR: BLACK
HD10 SERIES

ENVELOPE

EP — MATL. CODE

DEUTSCH INDUSTRIAL
3850 INDUSTRIAL AVE.
HEMET, CA 92545

B — HD10-9-96P*-B025

DWG SIZE | CODE 11139 | SHEET 1 OF 1