tyco Electronics

Specification Control Drawing

Raychem

202K232-*-11

a) Part as supplied.

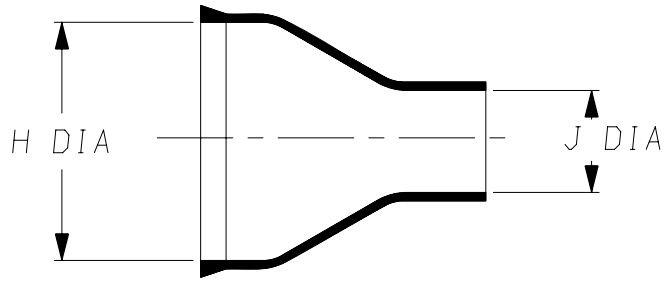

b) Part after unrestricted recovery.

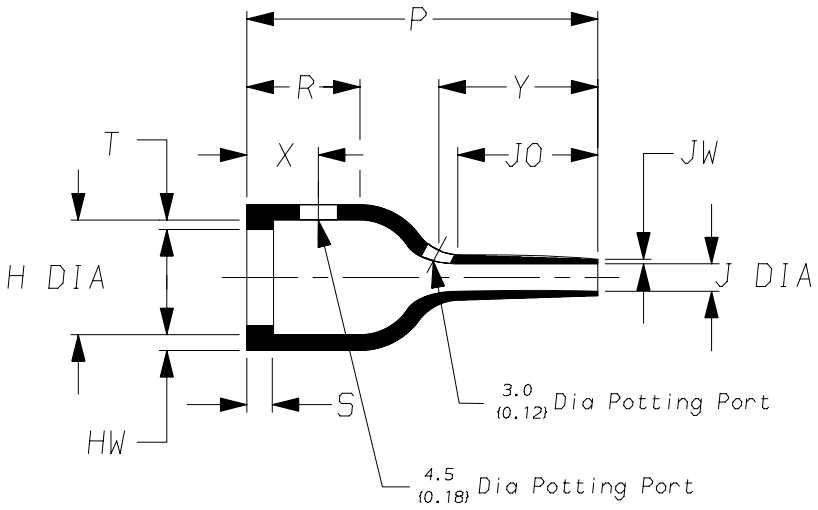

DIMENSIONS in millimetres {in inches, for reference}

Part No.	H Min a	H Max b	J Min a	J Max b	P ±10% b	R ±10% b	S ±10% b	T ±10% b	JO ±10% b	HW ±20% b	JW ±20% b	X ±20% b	Y ±20% b
202K232-*-11	25 {0.98}	13.8 {0.54}	8.0 {0.31}	3.3 {0.13}	40 {1.57} #	13 {0.51} #	3.0 {0.12}	1.0 {0.04}	16 {0.63}	1.8 {0.07}	0.5 {0.02}	9.0 {0.35} #	18 {0.71}

This is a trimmed variant with Potting Ports
Modified dimensions are shown thus:- #

Copyright (!)
The copyright in this drawing is the property of Tyco Electronics UK Ltd. The drawing is issued on the condition that it is not copied, reproduced or disclosed to a third party, either in whole or in part without the prior written consent of Tyco Electronics UK Ltd.

Drawn A.LILLEY. Checked Issue 1 Date October 2006 Conforms to ISO Recommendations
3rd Angle Projection
Not to Scale

Approval
Design MKTG. Q.A.

Raychem	Specification Control Drawing	Part Number 202K232-*-11 Issue 1

Iss.	Date	E.C.R. No.	Details of Change

Ordering Information

202K232-*-11/**

- Adhesive Slash Number (if required see compatibility chart)
- Modification number
- Material Dash Number (see compatibility chart)
- Base Part Number

COMPATIBILITY CHART

Material Dash Number	Material Description	SPEC Number	Coating Slash Number
-3	POLYOLEFIN, SEMI-RIGID	RT-301, RK-6703	/42 ,/86, /180
-4	POLYOLEFIN, FLEXIBLE	RT-1304 RT-1050	/42 ,/86, /180
-6	SILICON	RT-602, RK-6706	N/A
-12	FLUOROELASTOMER, FLEXIBLE	RT-1312, RW-2071	/225
-25	ELASTOMER, FLUID RESISTANT	RT-1325, RK-6713	/42, /86, /225
-130	POLYOLEFIN, COMMERCIAL FLEXIBLE	RW-2008	/42

NOTES

(1) As supplied dimensions are for uncoated parts, when coating is added entry diameters will reduce by 1.5mm Max.

Tyco Electronics UK Ltd.
Faraday Road,
Swindon, Wiltshire, SN3 5HH
England
Telephone: (01793) 528171 Fax: 572516

Cage Code K1010

Tyco Electronics Corporation
300, Constitution Drive,
Menlo Park, CA 94025
USA
Telephone (650) 361-3860 Fax: (650) 361-5579

Cage Code 06090