224W511-12

a) Part as supplied.

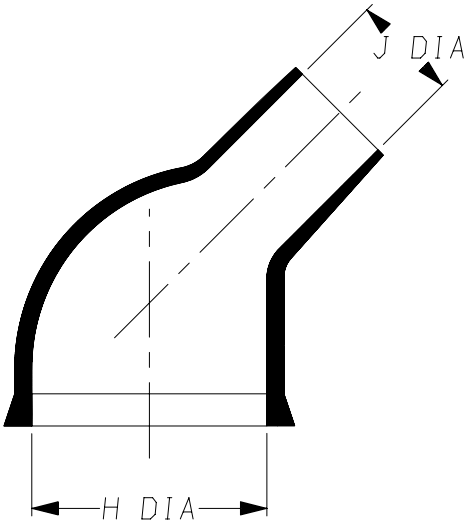

b) Part after unrestricted recovery.

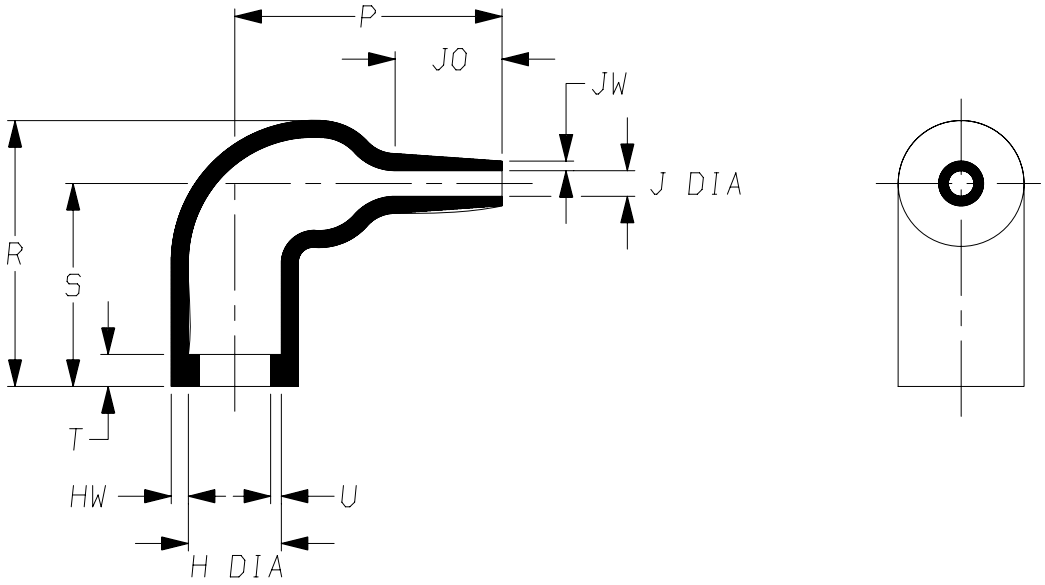

DIMENSIONS in millimetres {in inches, for reference}

Part No.	H Min a	H Max b	J Min a	J Max b	P ±10% b	R ±10% b	S ±10% b	T ±10% b	U ±10% b	JO ±10% b	HW ±20% b	JW ±20% b
224W511-12	19 {0.75}	9.3 {0.37}	8.0 {0.31}	2.8 {0.11}	25 {0.98}	25 {0.98}	19 {0.75}	3.0 {0.12}	1.0 {0.04}	10 {0.39}	1.6 {0.06}	0.9 {0.04}

Copyright (!)
The copyright in this drawing is the property of Tyco Electronics UK Ltd. The drawing is issued on the condition that it is not copied, reproduced or disclosed to a third party, either in whole or in part without the prior written consent of Tyco Electronics UK Ltd.

Drawn A.LILLEY. Checked Issue 1 Date May 2008
Approval
Design MKTG. Tech.
Conforms to ISO Recommendations
3rd Angle Projection
Not to Scale

Raychem	Specification Control Drawing	Part Number 224W511-12	Issue 1

Iss.	Date	E.C.R. No.	Details of Change

Ordering Information

224W511-12/**

- Adhesive Slash Number (if required see compatibility chart)
- Material Dash Number (see compatibility chart)
- Base Part Number

COMPATIBILITY CHART

Material Dash Number	Material Description	SPEC Number	Coating Slash Number
-12	FLUOROELASTOMER, FLEXIBLE	RT-1312	See note 2

NOTES

1. As supplied dimensions are for uncoated parts, when coating is added entry diameters will reduce by 1.5mm Max.

2. For /225 coating option please refer to Product Management.

Tyco Electronics UK Ltd.
Faraday Road,
Swindon, Wiltshire, SN3 5HH
England
Telephone: (01793) 528171 Fax: 572516

Cage Code K1010

Tyco Electronics Corporation
300, Constitution Drive,
Menlo Park, CA 94025
USA
Telephone (650) 361-3860 Fax: (650) 361-5579

Cage Code 06090