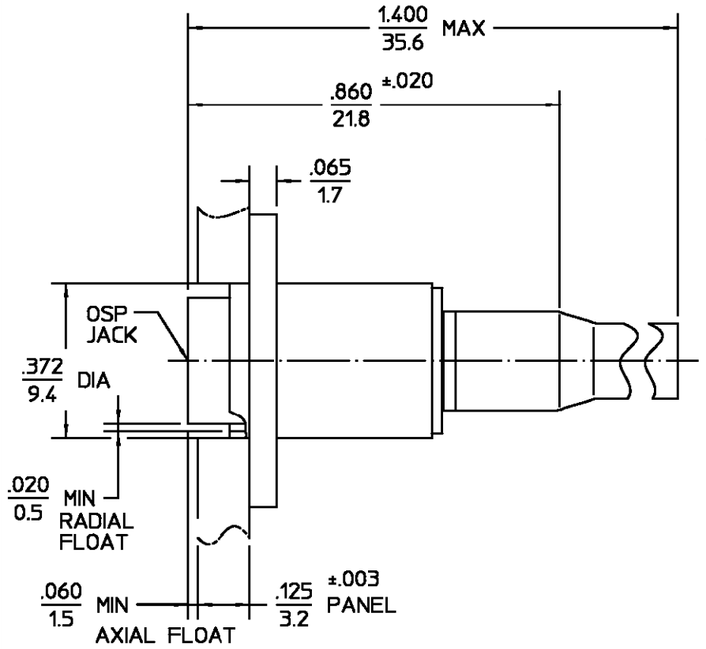

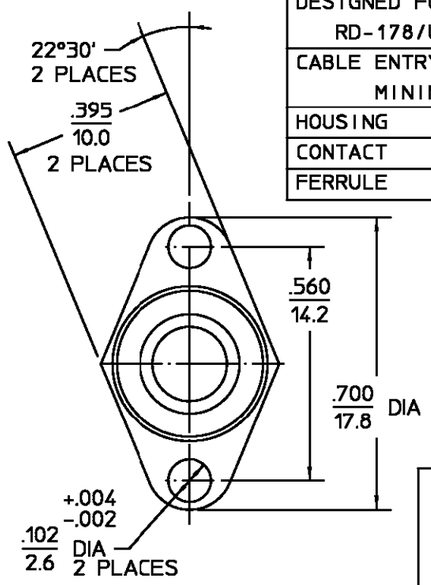

DESIGNED FOR USE WITH RD-178/U CABLE	
CABLE ENTRY DIAMETER MINIMUM	
HOUSING	.036
CONTACT	.014
FERRULE	.109

REVISIONS			
REV	DESCRIPTION	DATE	APPROVED
03_0	REVISED	03/01/94	

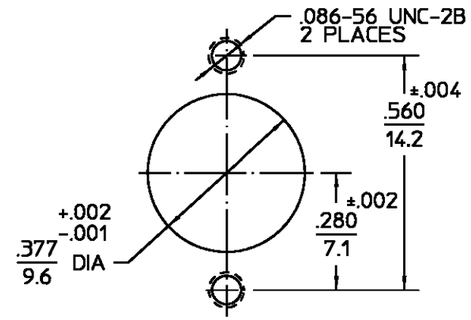

ELECTRICAL		MECHANICAL		ENVIRONMENTAL
Nominal Impedance (Ohms)	50	Interface Dimensions		Temperature Rating -65° to +125°C
Frequency Range (GHz) DC to	3	PER OMNI SPECTRA CATALOG		Vibration MIL-STD-202, Method 204, Condition D
Volt Rating (VRMS MAX)		Mating Characteristics:		Shock MIL-STD-202, Method 213, Condition I
@ Sea Level	170	Insertion (MAX Lbs)	3	Thermal Shock MIL-STD-202, Method 107, Condition B except High Temp shall be +85°C
VSWR 1.2 +.02 f(GHz)		Withdrawal (MIN Oz)	1	Moisture Resistance MIL-STD-202, Method 106
Insertion Loss (dB MAX) .06 $\sqrt{f(GHz)}$		Force to Engage (In-Lbs MAX)	3	Corrosion - MIL-STD-202, Method 101, Condition B
RF Leakage (dB MIN) (Interface Only, Fully Mated)	-[85-f(GHz)]	& Disengage (In-Lbs MAX)	1.5	
Corona, 70,000 Ft (VRMS MIN)	125	Center Contact Captivation		
Dielectric Withstanding Voltage		Axial (Lbs)	6	
(VRMS MIN) @ Sea Level	500	Cable Retention		
Contact Resistance (Milliohms MAX)		Axial Force (Lbs MIN)	10	
Center Contact	2.0	Torque (In-Oz MIN)	N/A	
Outer Contact	2.0	Weight (Grams)	TBD	
Cable to Housing	0.5			
RF High Potential @ Sea Level				
(VRMS MIN @ 5 MHz)	335			
I.R.(Megohms MIN)	5000			

COMPONENT	MATERIAL	FINISH
OUTER HOUSING INNER HOUSING WASHER	STAINLESS STEEL PER ASTM-A484 AND ASTM-A582, TYPE 303	PASSIVATE PER ASTM-A380
DIELECTRIC	TFE FLUOROCARBON PER ASTM-D-1457	N/A
CENTER CONTACT CONTACT RING CONTACT SLEEVE	BERYLLIUM COPPER PER ASTM B 196, ALLOY C17300, CONDITION H	GOLD PLATE PER MIL-G-45204 OVER
SPRING	STAINLESS STEEL	PASSIVATE PER ASTM-A380
RETAINING RING SPRING WASHER	BERYLLIUM COPPER PER ASTM B 194, ALLOY C17200, CONDITION H	NICKEL PLATE PER QQ-N-290
SHRINK TUBING	HEAT SHRINKABLE POLYOLEFIN COMPOUND MIL-I-23053/4	N/A
FERRULE	COPPER OR BRASS ALLOY ROCKWELL F65 MAXIMUM	GOLD PLATE PER MIL-G-45204 OVER

UNLESS OTHERWISE SPECIFIED DIMENSIONS ARE IN INCHES
TOLERANCE ON
FRAC. ± 1/64 DEC. ±.005 ANGLES ± 1°

$\frac{.XXX = in}{XX.X = mm}$

DRAWN BY M.YUEN DATE 2-8-88
CHECKED BY MH/M 2-10-88
APP'D BY BAR 2-11-88

These drawings and specifications are the property of Omni Spectra Incorporated and shall not be reproduced or copied or used in whole or in part as the basis for the manufacture or sale of item(s) without written permission.

USE ASS'Y PROCEDURE

NO. A.P. 45-094

AMP Incorporated
140 Fourth Avenue
Waltham, MA 02451-7599

TITLE OSP 2 HOLE FLOATING FLANGE MOUNT CABLE JACK CRIMP ATTACHMENT

SIZE	CODE IDENT NO.		REV
B	26805	4536-5014-02	03_0
SCALE 5:1			SHEET 1 OF 1

CUSTOMER DRAWING

AMP PART # 1058572-1
SHEET 1 OF 1 REV A