N	DM5607-*-*P

REVISIONS			
SYM	DESCRIPTION	DATE	APPROVAL
N	REVISED [illegible]	7-23-[illegible]	

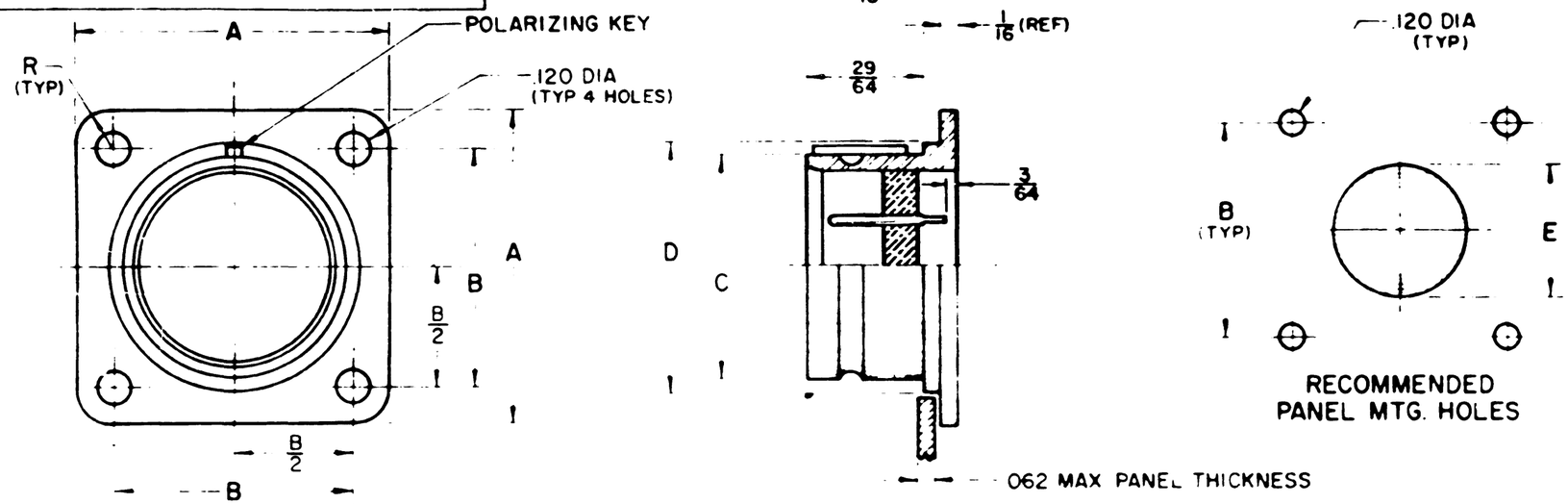

SHELL SIZE	PART NUMBER	A	B	C DIA	D DIA	E DIA +.010 -.000	R	WEIGHT IN LBS
3	DM5607-3-*P	7/8	.625	7/16	.531	.541	1/8	
7	DM5607-7-*P	1	.719	37/64	[illegible]	.681	1/8	
12	DM5607-12-*P	1 3/32	.812	45/64	.813	.822	1/8	
19	DM5607-19-*P	1 3/16	.906	27/32	.938	.947	1/8	
27	DM5607-27-*P	1 9/32	.968	1	1.125	1.135	1/8	
37	DM5607-37-*P	1 7/16	1.187	1 1/8	1.219	1.228	1/8	
61	DM5607-61-*P	1 25/32	1.437	1 13/32	1.500	1.510	5/32	

NOTES:
1-INSERTS ARE CONTINUOUS DIELECTRIC
2-CONTACT IDENT. IS IN CONTRASTING COLOR TO INSERTS
3-FINISH - SHELL - TIN OVER CADMIUM
CONTACTS - TIN OVER CADMIUM

1-20-65

ENVELOPE
RECEPTACLE CONNECTOR
ELECTRICAL HERMETIC
MINIATURE
QUICK - DISCONNECT
SQUARE FLANGE MTG.

NONE

APPLICATION

The Deutsch Company
ELECTRONIC COMPONENTS DIVISION
Municipal Airport • Banning, California

B DM5607-*-*P