tyco Electronics Raychem

Specification Control Drawing

400W242

a) Part as supplied

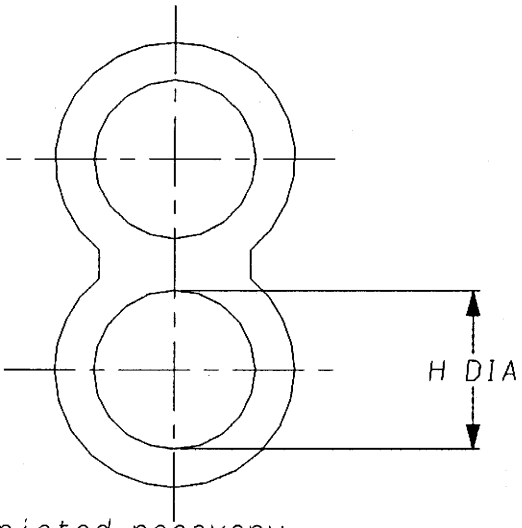

b) Part after unrestricted recovery

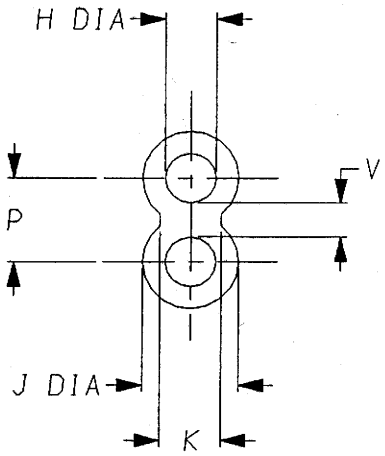

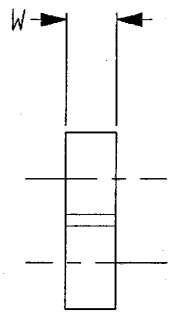

SIDE VIEW

DIMENSIONS (in millimetres)

Part No.	H MIN a	H MAX b	J MAX b	K ±1.2 b	P ±1.7 b	V ±0.45 b	W ±1 b
400W242-25	28	10.2	19.3	12	17	7.0	10

Copyright (!)
The copyright in this drawing is the property of Tyco Electronics UK Ltd. The drawing is issued on the condotion that it is not copied, reproduced or disclosed to a third party, either in whole or in part without the prior written consent of Tyco Electronics UK Ltd.

Drawn A.LILLEY. Checked Issue 1 Date March 2001

Conforms to ISO Recommendations
3rd Angle Projection
Not to Scale

Approval
Design MKTG. Q.A.

Iss.	Date	E.C.R. No.	Details of Change

Ordering Information

400W242-**/**-0

- Adhesive Slash Number (if required see compatibility chart)
- Material Dash Number (see compatibility chart)
- Base Part Number

COMPATIBILITY CHART

MATERIAL DASH NUMBER	MATERIAL DESCRIPTION	COATING SLASH NUMBER
-3	POLYOLEFIN, SEMI-RIGID	/42 , /86
-4	POLYOLEFIN, FLEXIBLE	/42 , /86
-25	ELASTOMER, FLUID RESISTANT	/86, /225
-100	ZERO HALOGEN	/86

AS SUPPLIED DIMENSIONS ARE FOR UNCOATED PARTS,
WHEN COATING IS ADDED, ENTRY DIAMETERS WILL REDUCE BY 1.5mm MAX.

Raychem Wire & Harness
a Division of Tyco Electronics
Faraday Road,
Swindon, Wiltshire, England. SN3 5JA
Telephone: (01793) 528171 Fax: 572516

Raychem Wire & Harness
a Division of Tyco Electronics
300, Constitution Drive, Menlo Park,
California 94025-1164, USA
Telephone (650) 361-3333 Fax: (650) 361-5579