REVISIONS			
REV	DESCRIPTION	DATE	APPROVED
02_2	REVISED	8/2/96 8/16/96	

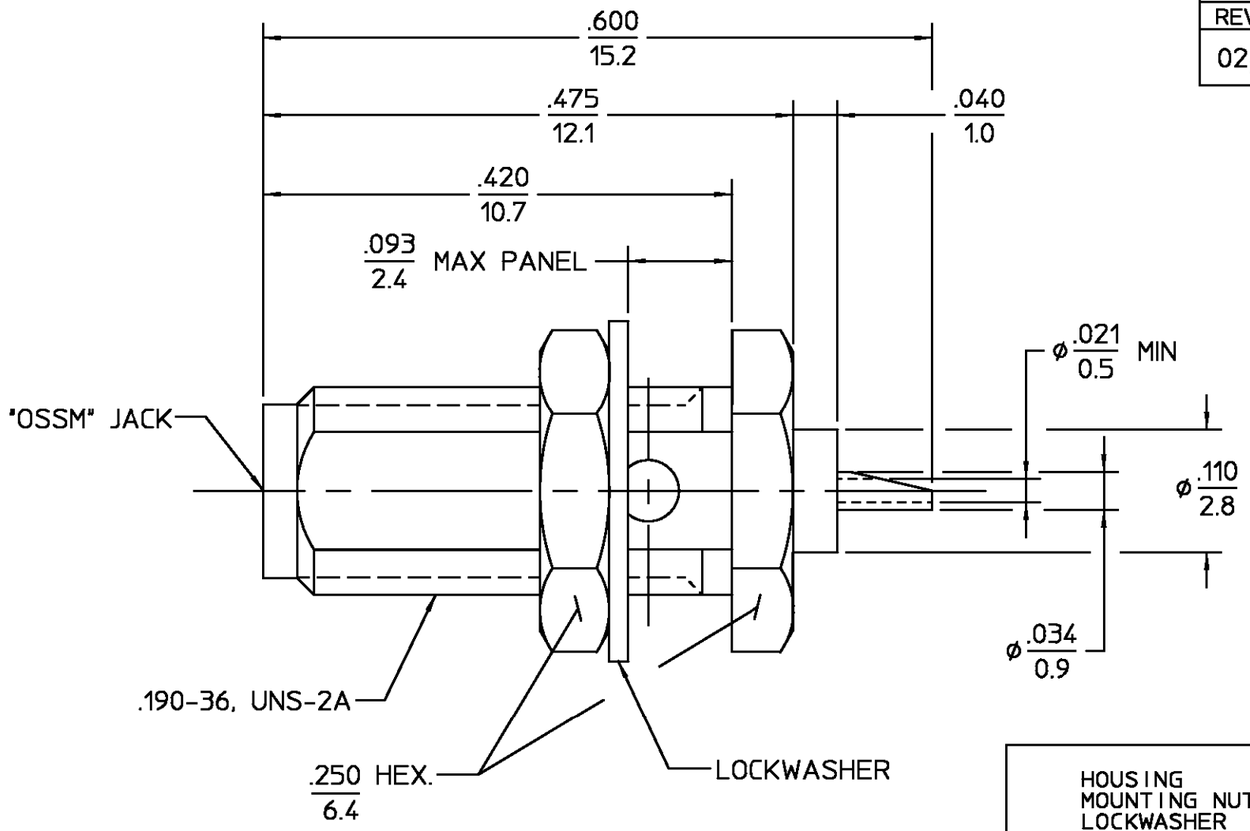

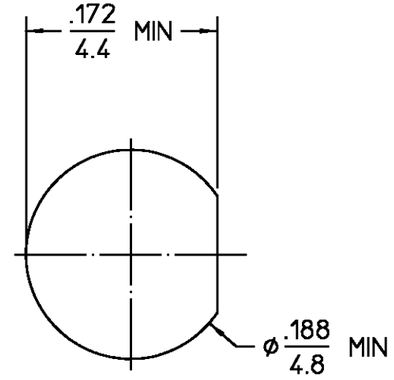

RECOMMENDED MOUNTING HOLE

COMPONENT	MATERIAL	FINISH
HOUSING MOUNTING NUT LOCKWASHER	STAINLESS STEEL PER ASTM-A484 AND ASTM-A582, TYPE 303	GOLD PLATE PER MIL-G-45204
DIELECTRIC	TFE FLUOROCARBON PER ASTM-D-1457	N/A
CENTER CONTACT	BERYLLIUM COPPER PER ASTM-B-196 OR ASTM-B-197, ALLOY C17300, CONDITION H	GOLD PLATE PER MIL-G-45204

NOTES:
1. CAPTURED CENTER CONTACT

.XXX = in
XX.X = mm (REF)

UNLESS OTHERWISE SPECIFIED DIMENSIONS ARE IN INCHES

FRAC. ± 1/64 DEC. ±.005 ANGLES ± 1°

DRAWN BY KL DATE 12/2/70
CHECKED BY PRB 12/7/70
APP'D BY BWC 12/7/70

These drawings and specifications are the property of M/A COM Interconnect Div. and shall not be reproduced or copied or used in whole or in part as the basis for the manufacture or sale of item(s) without written permission.

USE ASS'Y PROCEDURE

NO. A.P. N/A

AMP Incorporated
140 Fourth Avenue
Waltham, MA 02451-7599

TITLE "OSSM" BULKHEAD FEEDTHRU JACK RECEPTACLE - SOLDER POT TERMINAL

SIZE	CODE IDENT NO.		REV
B	26805	1056-0000-00	02_2

SCALE 8:1 SHEET 1 OF 1

COPY IN PUERTO RICO

CUSTOMER DRAWING

AMP PART # 1045629-1
SHEET 1 OF 1 REV A