REV	
A	0528-005-3805

REVISIONS			
SYM	DESCRIPTION	DATE	APPROVED
NC	NEW RELEASE PER E.O. P18780	2/25/05	C.W.
A	REVISED PER E.O. P18864	4/8/05	

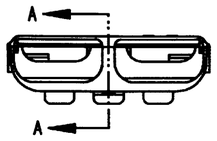

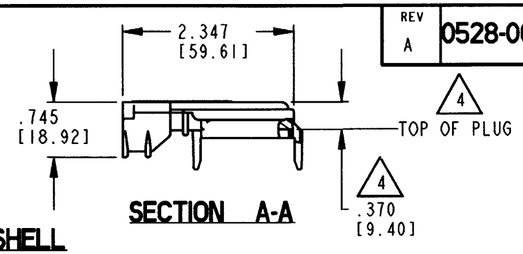

SECTION A-A

CLOSED BACKSHELL

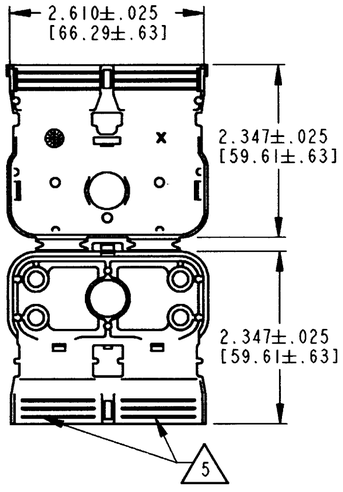

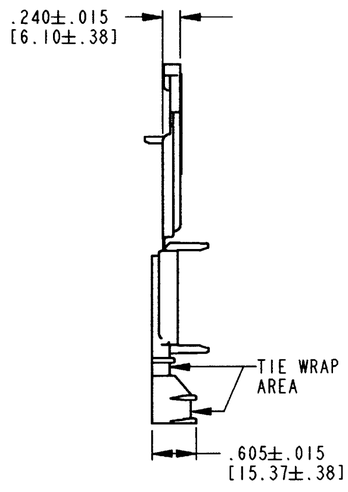

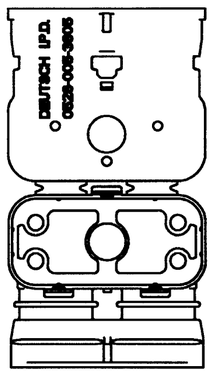

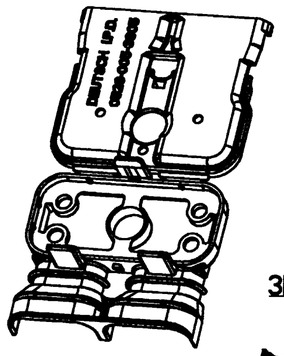

3D VIEWS

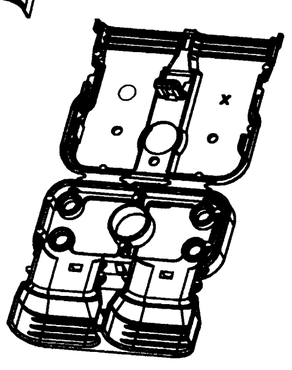

5. THIS AREA TO BE USED WITH 10 X 25mm OVAL CONVOLUTE TUBING R-72506 RATED AT 125 °C OR R-72369 RATED AT 85 °C SUPPLIED BY M&Q PLASTICS (210)225-7622.

4. THIS DIMENSION REPRESENTS THE HEIGHT OF THE BACKSHELL WHEN MATED TO THE PLUG AND IN THE CLOSED POSITION.

3. THIS PART MATES WITH THE DRC26-38S01 THRU 10.

2. DIMENSIONS WITHOUT TOLERANCE ARE FOR REFERENCE ONLY.

NOTES: 1. ALL DIMENSIONS ARE IN INCHES [mm].

	SIGNATURE & DATE
DR	M. GONZALEZ 12/13/04
CHK	
PE	3/16/05
APPD	4/8/05
SCALE 1:1	WT

90° LOW PROFILE
BACKSHELL FOR
38 PIN PLUG
DRC SERIES

ENVELOPE

CP	MATL. CODE

The Deutsch Company
DEUTSCH I.P.D.
3850 INDUSTRIAL AVE.
HEMET, CALIF. 92545

DWG SIZE		
B	0528-005-3805	
	CODE 11139	SHEET 1 OF 1