THIS DRAWING IS UNPUBLISHED. RELEASED FOR PUBLICATION -,2017.
© COPYRIGHT 2017 By -TE Connectivity Germany Gmbh ALL RIGHTS RESERVED.

REVISIONS					
P	LTR	DESCRIPTION	DATE	DWN	APVD
	A2	CHANGE OF SHELL DESIGN	22NOV2024	KS	LET

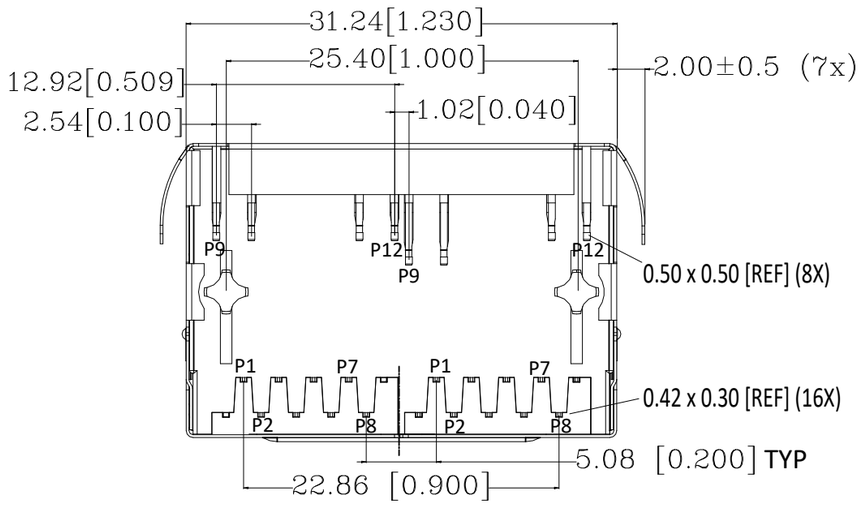

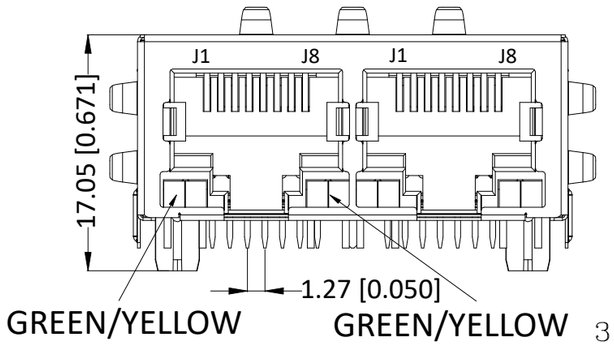

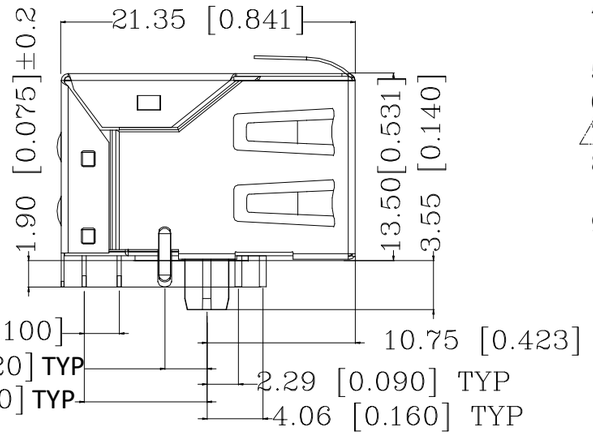

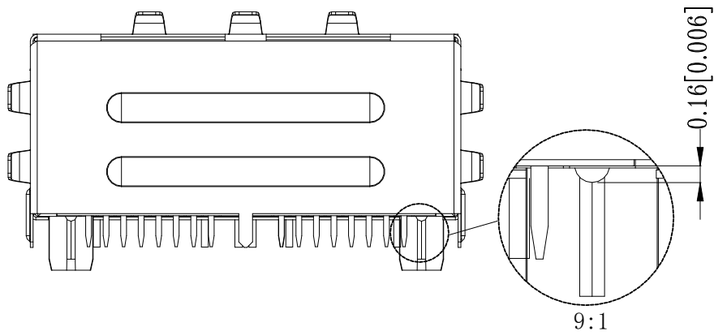

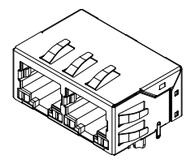
1:1

⚠1 CONNECTOR MATERIAL:
HOUSING: LCP BLACK UL94 V-0
INSERT: LCP BLACK UL94 V-0
SHIELD: BRASS
SHIELD PLATING: NICKEL
CONTACT: COPPER ALLOY
CONTACT PLATING: SELECTIVE GOLD, MIN. 0.76 µm (30 µinch) IN CONTACT AREA OVER MIN. 1.27 µm (50 µinch) NICKEL
SOLDER PIN PLATING: 3.05 µm (120 µinch) TIN OVER 1.27 µm (50 µinch) NICKEL OVER ALL
SHIELDING PIN PLATING: NICKEL

2 PIN NOT ELECTRICALLY CONNECTED MAYBE OMITTED SEE ELECTRICAL CIRCUIT DIAGRAM FOR OMITTED PINS

3 RJ45 CAVITIY DIMENSION CONFORM TO FCC PART 68

4 THE PART IS RECOMMENDED FOR REFLOW SOLDERING PROCESS PEAK SOLDERING: TEMPERATURE MAX. +260° C, MAX. 10s

5 OPERATING TEMPERATURE: T= -40° C TO +85° C

6 STORAGE TEMPERATURE: T= -40° C TO +85° C

⚠7 UNLESS OTHERWISE SPECIFIED, SEE TABLE FOR ALL DIMENSIONS TOLERANCES

8 JACK CONFIGURATION: 1 x 2
TAB DIRECTION: DOWN

9 PACKAGING: TRAY ACCORDING TO PACKAGING SPECIFICATION 107-18116

⚠7 TABLE OF TOLERANCE (mm)

RANGE	TOLERANCE
0–10	±0.15
>10–40	±0.25
>40–70	±0.30
>70	±0.40

THIS DRAWING IS A CONTROLLED DOCUMENT.

DIMENSIONS: mm [INCHES]

TOLERANCES UNLESS OTHERWISE SPECIFIED: ⚠7
0 PLC ± –
1 PLC ± –
2 PLC ± –
3 PLC ± –
4 PLC ± –
ANGLES ± –

MATERIAL ⚠1

FINISH ⚠1

DWN GANESH C M 27AUG2016
CHK FRANZ MUELLER 27AUG2016
APVD MARTIN SZELAG 27AUG2016
PRODUCT SPEC 108-94552
APPLICATION SPEC 114-94447
WEIGHT –

TE Connectivity

NAME RJ45 JACK INT.MAG. 10/100 LED 1x2
–
–

SIZE	CAGE CODE	DRAWING NO	RESTRICTED TO
A3	00779	C-5-2301996-6	–

CUSTOMER DRAWING | SCALE 3:1 | SHEET 1 OF 3 | REV A2

THIS DRAWING IS UNPUBLISHED. RELEASED FOR PUBLICATION – ,2017.
© COPYRIGHT 2017 By –TE Connectivity Germany Gmbh ALL RIGHTS RESERVED.

REVISIONS					
P	LTR	DESCRIPTION	DATE	DWN	APVD
	–	SEE SHEET 1	–	—	—

SUGGESTED PCB LAYOUT

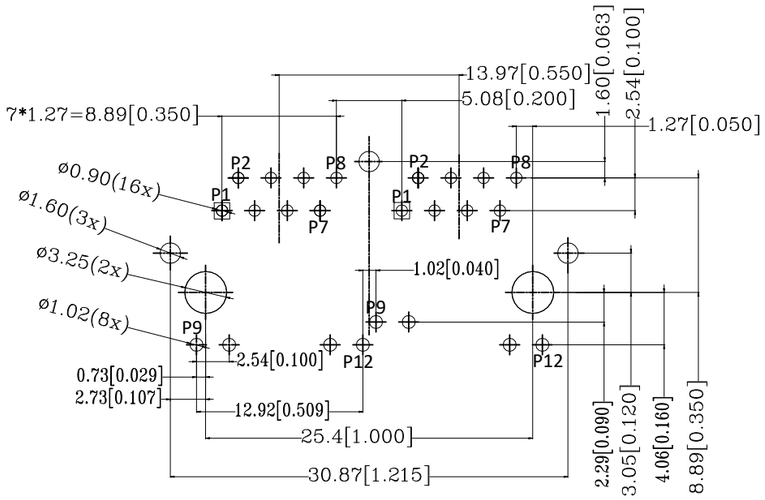

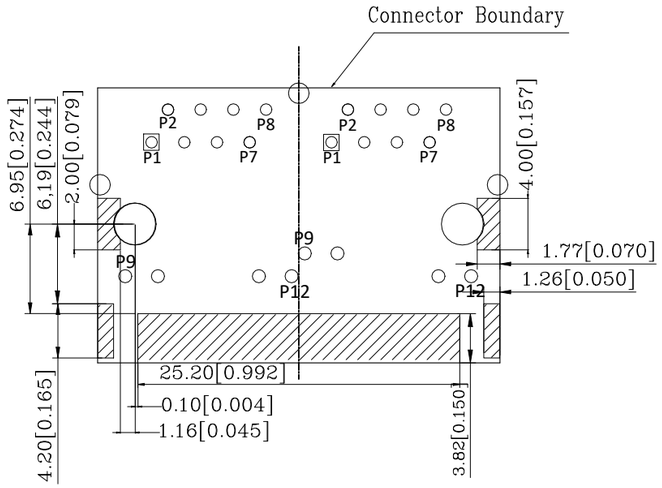

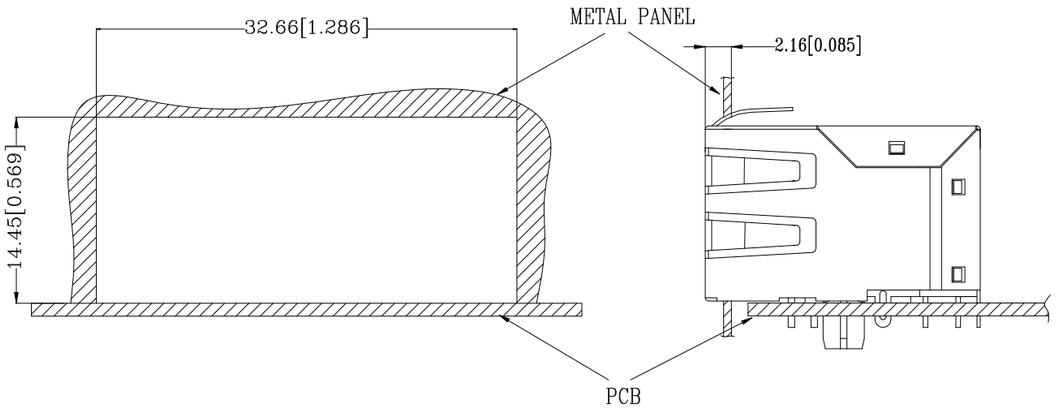

UNIT: mm / inch
TOLERANCES: ±0.10 / 0.004
ONLY FOR THIS VIEW

THIS DRAWING IS A CONTROLLED DOCUMENT.

DIMENSIONS: mm [INCHES]

TOLERANCES UNLESS OTHERWISE SPECIFIED:
0 PLC ± –
1 PLC ± –
2 PLC ± –
3 PLC ± –
4 PLC ± –
ANGLES ± –
7

MATERIAL 1

FINISH 1

DWN	GANESH C M 27AUG2016
CHK	FRANZ MUELLER 27AUG2016
APVD	MARTIN SZELAG 27AUG2016
PRODUCT SPEC	108-94552
APPLICATION SPEC	114-94447
WEIGHT	0

TE Connectivity

NAME: RJ45 JACK INT.MAG. 10/100 LED 1x2

SIZE	CAGE CODE	DRAWING NO	RESTRICTED TO
A3	00779	C-5-2301996-6	—

CUSTOMER DRAWING | SCALE 3:1 | SHEET 2 OF 3 | REV A2

THIS DRAWING IS UNPUBLISHED. RELEASED FOR PUBLICATION – ,2017.
© COPYRIGHT 2017 By –TE Connectivity Germany Gmbh ALL RIGHTS RESERVED.

REVISIONS

P	LTR	DESCRIPTION	DATE	DWN	APVD
	–	SEE SHEET 1	–	—	—

ELECTRICAL CIRCUIT DIAGRAM

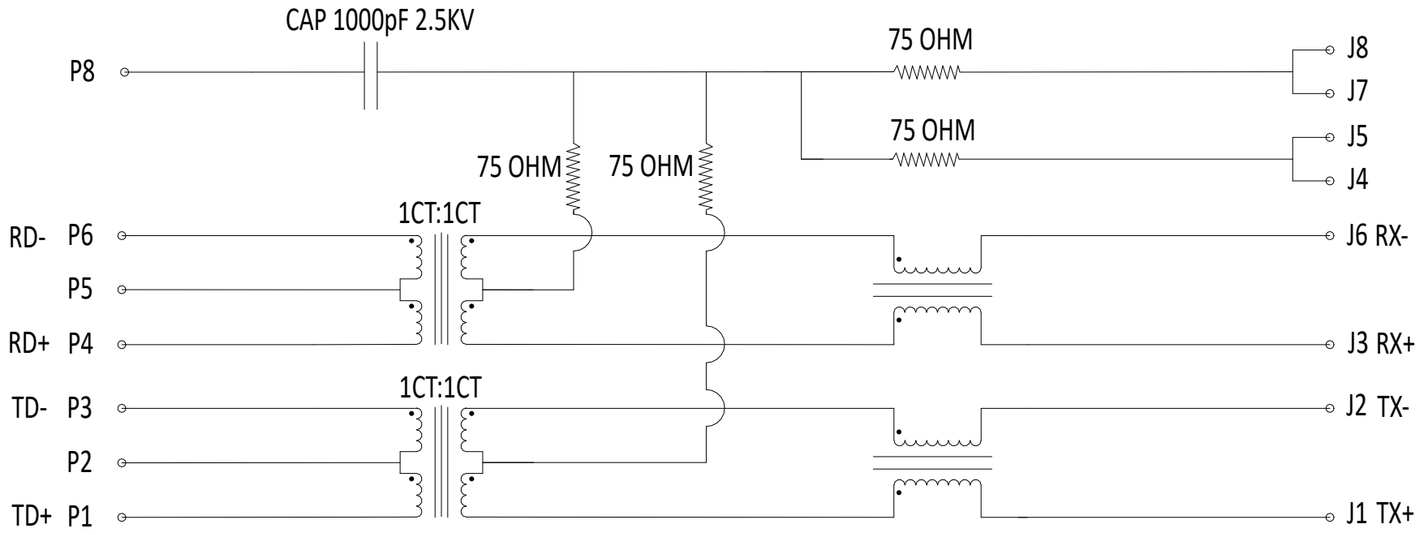

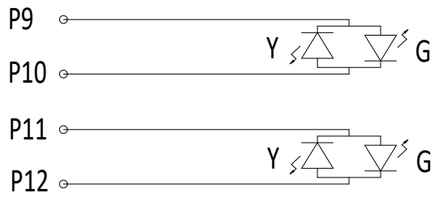

Pin	Yellow	Green	Pin	Yellow	Green
P9	–	+	P11	–	+
P10	+	–	P12	+	–

WIRE BONDED , V_F = 1.8V ~ 2.4V, I_F = 20mA

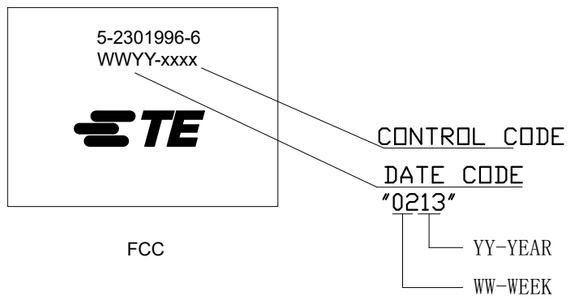

1. TURN RATIO @100kHz: (P1~P3):(J1~J2) = 1:1±2%
   (P4~P6):(J3~J6) = 1:1±2%
2. PRIMARY INDUCTANCE: 350µH MIN. @100kHZ,0.1V 8mA DC BIAS
3. DC RESISTANCE: 1.2 OHMS MAX.
4. INSERTION LOSS: 1–100MHz –1.2dB MAX.
5. RETURN LOSS: 1–30MHz –16dB MIN. (@30MHz –17.0dB TYP)
   30–60MHz –16dB+20log(f/30MHz) MIN.
   (@60MHz –13.0dB TYP)
   60–80MHz –10dB MIN. (@80MHz –11.0dB TYP)
6. CROSS TALK: 1–100MHz –30dB MIN.
7. COMMON TO COMMON MODE ATTENUATION: 1–100MHz –30dB MIN.
8. ISOLATION: PHY SIDE TO LINE SIDE: 2250VDC

THIS DRAWING IS A CONTROLLED DOCUMENT.

DIMENSIONS: mm [INCHES]

TOLERANCES UNLESS OTHERWISE SPECIFIED:
0 PLC ± –
1 PLC ± –
2 PLC ± –
3 PLC ± –
4 PLC ± –
ANGLES ± –
7

MATERIAL 1

FINISH 1

DWN	GANESH C M	27AUG2016
CHK	FRANZ MUELLER	27AUG2016
APVD	MARTIN SZELAG	27AUG2016
PRODUCT SPEC	108-94552	
APPLICATION SPEC	114-94447	
WEIGHT	0	

TE Connectivity

NAME: RJ45 JACK INT.MAG. 10/100 LED 1x2

SIZE	CAGE CODE	DRAWING NO	RESTRICTED TO
A3	00779	C-5-2301996-6	—

CUSTOMER DRAWING | SCALE 3:1 | SHEET 3 OF 3 | REV A2