THIS DRAWING IS UNPUBLISHED. RELEASED FOR PUBLICATION FEB ,2012.
© COPYRIGHT 2012 By Tyco Electronics Japan G.K. ALL RIGHTS RESERVED.

LOC	DIST
—	—

REVISIONS

P	LTR	DESCRIPTION	DATE	DWN	APVD
	A3	REVISED	24JUL2015	T.K	C.O

本図：2174226−1
AS SHOWN:2174226−1

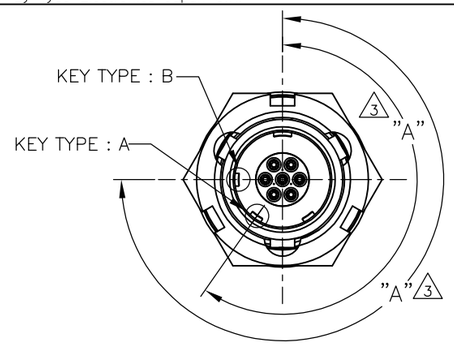

KEY POSITION OPTION
SCALE 2:1

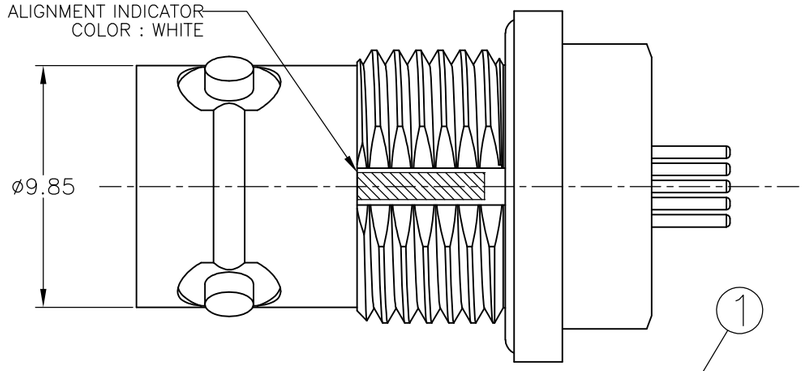

1. MATERIAL: BRASS
   FINISH : BLACK Sn−Ni, OVER Ni (9 ~ 10um)
2. MATERIAL: BRASS
   FINISH : Ni PLATING (3 ~ 6um)
3. KEY OPTION : TYPE N IS NORMAL POSITION.
   OPTION KEY IS TYPE A(−2) AND TYPE B(−3).

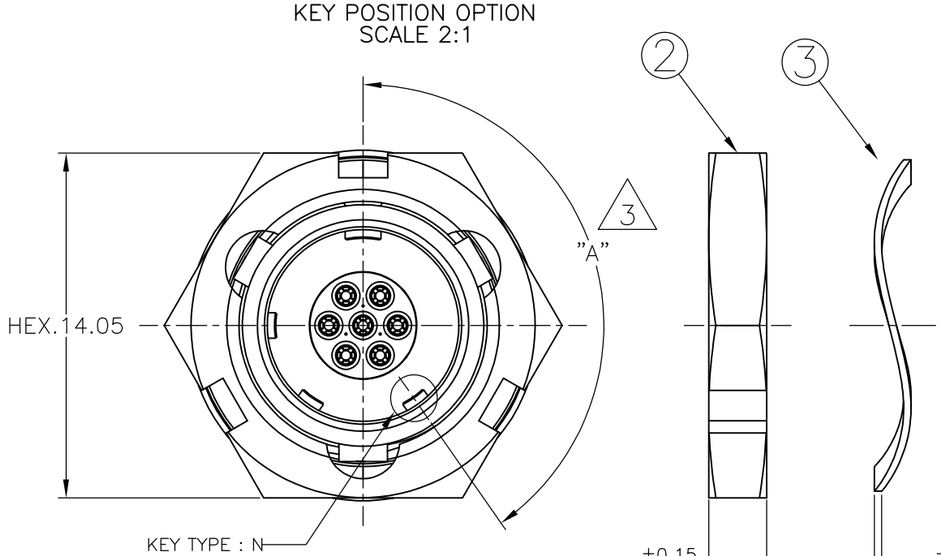

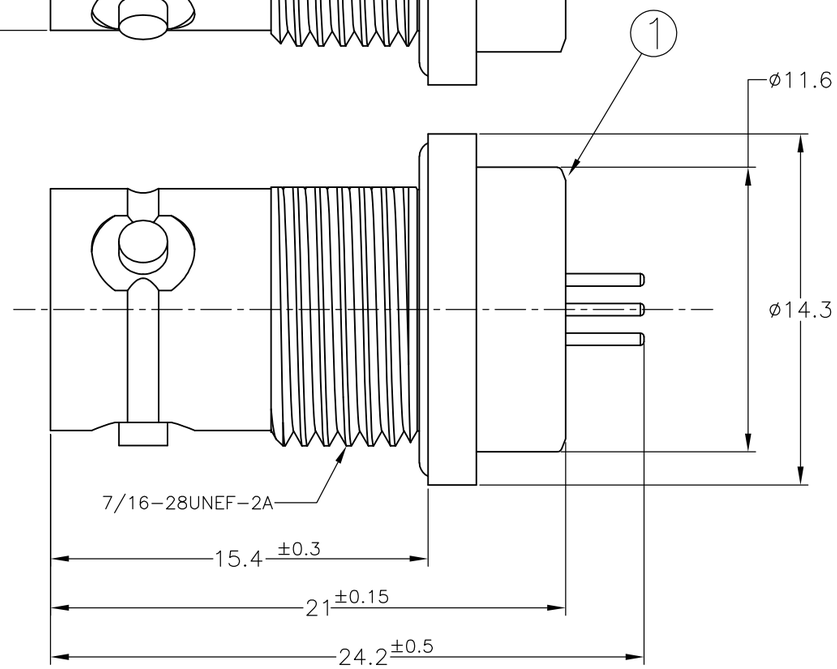

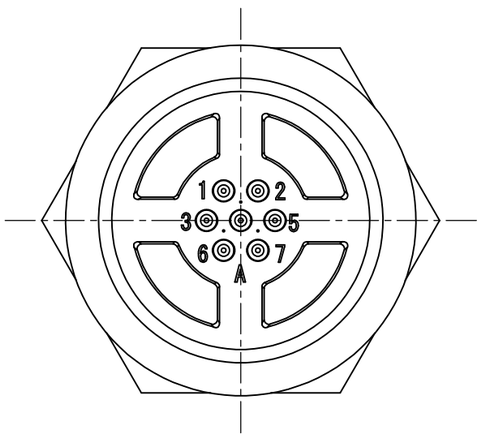

3 KEY POSITION

270°	TYPE B	2174226−3
215°	TYPE A	2174226−2
145°	TYPE N	2174226−1
DIM "A"	KEY TYPE	PART NUMBER

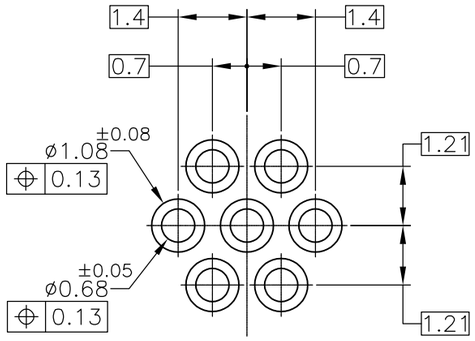

PCB LAYOUT
SCALE 8:1

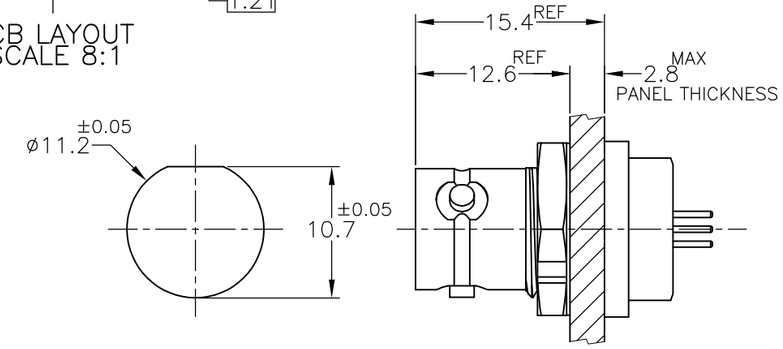

PANEL MOUNT REFARENCE DIMENSION
SCALE 2:1

−3	−2	−1	PART NUMBER		ITEM
1	1	1	2	HEX. NUT	3
1	1	1	3	WAVE SPRING WASHER	2
1			2	CONNECTOR ASSEMBLY KEY−B	1
	1		2	CONNECTOR ASSEMBLY KEY−A	1
		1	2	CONNECTOR ASSEMBLY KEY−N	1
QTY			FINISH		ITEM

THIS DRAWING IS A CONTROLLED DOCUMENT.

DIMENSIONS: mm

TOLERANCES UNLESS OTHERWISE SPECIFIED: ±0.1
0 PLC ±
1 PLC ±
2 PLC ±
3 PLC ±
4 PLC ±
ANGLES ±5°

MATERIAL 1
FINISH −

DWN T.SUGIYAMA	19FEB2012
CHK T.TONOBE	07MAY2012
APVD T.SUGIYAMA	07MAY2012
PRODUCT SPEC	108−78938
APPLICATION SPEC	114−5503
WEIGHT	10.810g

TE Connectivity

NAME
NMSMC 7P BAYONET RECE
PIN SOCKET / SOLDER TAIL
CONNECTOR KIT

SIZE	CAGE CODE	DRAWING NO	RESTRICTED TO
A3	00779	C−2174226	—

CUSTOMER DRAWING | SCALE 4:1 | SHEET 1 OF 1 | REV A3