THIS DRAWING IS A CONTROLLED DOCUMENT.

LOC	DIST
HJ	-

REVISIONS

P	LTR	DESCRIPTION	DATE	DWN	APVD
	A2	REVISED PER ECO-11-005150	25MAR2011	RK	HMR
	A3	UR-marking new	09DEC2011	UKo	AK
	A4	REVISED PER ECR-13-014508 (TE-Logo)	16SEP2013	UKo	AK

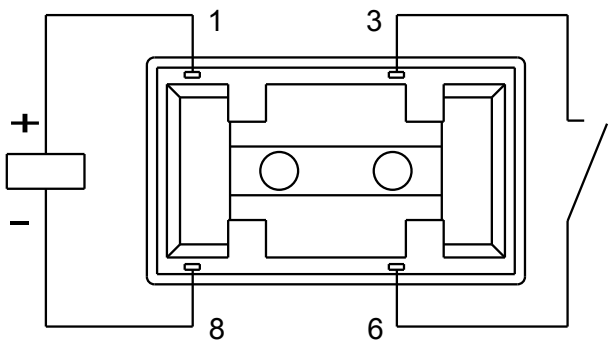

Relay - bottom view

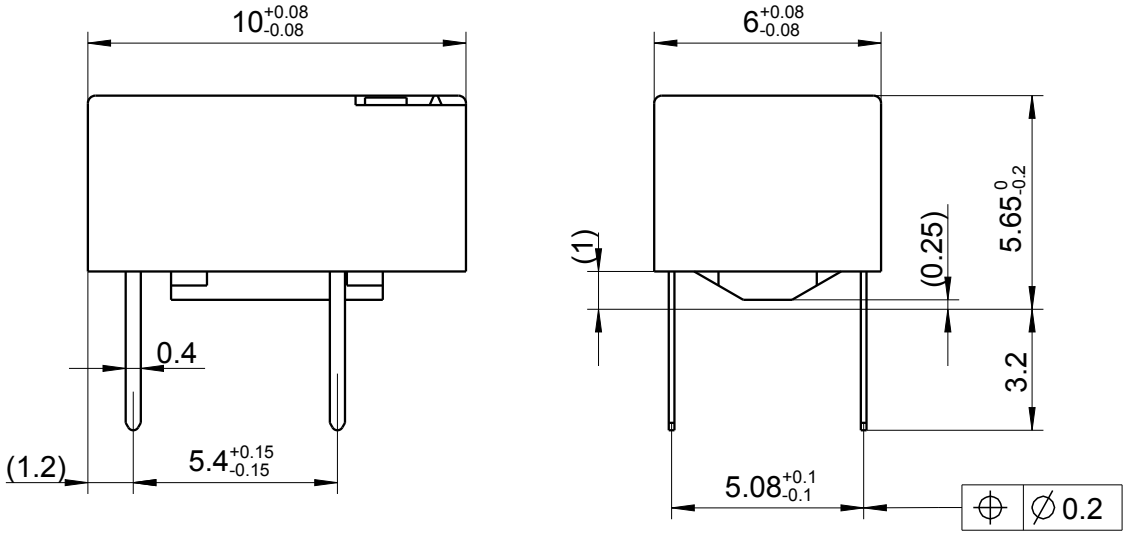

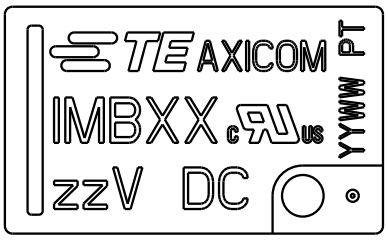

XX = Relay type
zz = nominal voltage
YYWW = Date code

RELEASED FOR PUBLICATION -
ALL RIGHTS RESERVED.
© COPYRIGHT2008
THIS DRAWING IS UNPUBLISHED.

DIMENSIONS: mm

TOLERANCES UNLESS OTHERWISE SPECIFIED: DIN 7168-m

0 PLC	±-
1 PLC	±-
2 PLC	±-
3 PLC	±-
4 PLC	±-
ANGLES	±-

DWN	UKo 9193	18JUN2008
CHK	HD 9121	18JUN2008
APVD	HD 9121	18JUN2008

PRODUCT SPEC: -

APPLICATION SPEC: -

WEIGHT: -

MATERIAL: - FINISH: -

TE Connectivity

NAME: IMB-Relay THT (1 Form A) Dimensions

SIZE	CAGE CODE	DRAWING NO	RESTRICTED TO
A4	00779	C- 1462041-1	-

CUSTOMER DRAWING | SCALE 5:1 | SHEET 1 OF 1 | REV A4