THIS DRAWING IS A CONTROLLED DOCUMENT.

REVISIONS					
P	LTR	DESCRIPTION	DATE	DWN	APVD
	BC1	ECR-15-002767	24FEB2015	KR	TN

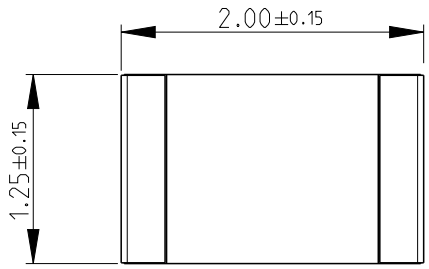

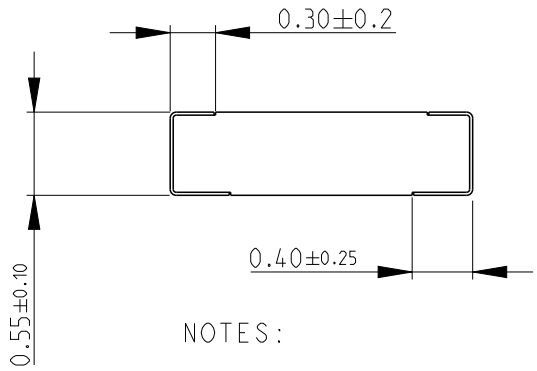

NOTES:

1) FOR FURTHER INFORMATION SEE DATA SHEET FOR RN73 SERIES-HIGH PRECISION RESISTORS (SMD)

2) 250 PER REEL PACKING SPEC NO LONGER AVAILABLE

RECOMMENDED LAND PATTERN

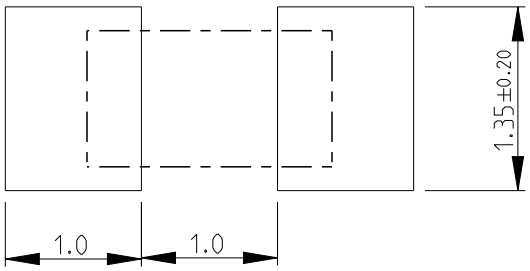

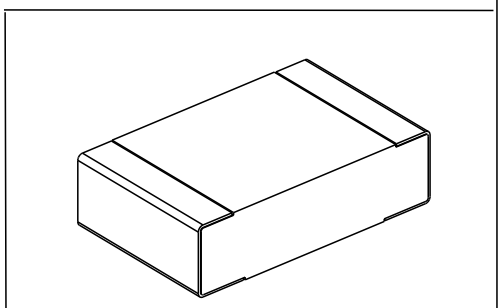

THIS DRAWING IS UNPUBLISHED. © COPYRIGHT2010 BY - ALL RIGHTS RESERVED. RELEASED FOR PUBLICATION 2010

DIMENSIONS: mm

TOLERANCES UNLESS OTHERWISE SPECIFIED:

0 PLC	±0.2
1 PLC	±0.1
2 PLC	±
3 PLC	±
4 PLC	±
ANGLES	±5°

DWN	PARUSURAM.T	13NOV2010
CHK	ALLAN.P	10NOV2010
APVD	STEPHEN.P	10NOV2010
PRODUCT SPEC	-	
APPLICATION SPEC	-	
WEIGHT	-	

MATERIAL: -

FINISH: -

TE Connectivity

NAME: HIGH PRECISION RESISTORS (SMD) SERIES RN73 2A

SIZE	CAGE CODE	DRAWING NO	RESTRICTED TO
A4	00779	C-1676285	-

Customer Drawing

SCALE 20:1 SHEET 1 OF 1 REV BC1