THIS DRAWING IS UNPUBLISHED. RELEASED FOR PUBLICATION 20
© COPYRIGHT 20 BY - ALL RIGHTS RESERVED.

REVISIONS					
P	LTR	DESCRIPTION	DATE	DWN	APVD
	B2	ECR-21-118862	10NOV2021	SM	FL
	B4	ECR-24-207086	09MAY2024	SP	FL
	B5	ECR-25-237661	19MAR2025	SP	FL
	B6	ECR-25-262005	27NOV2025	LQ	FL

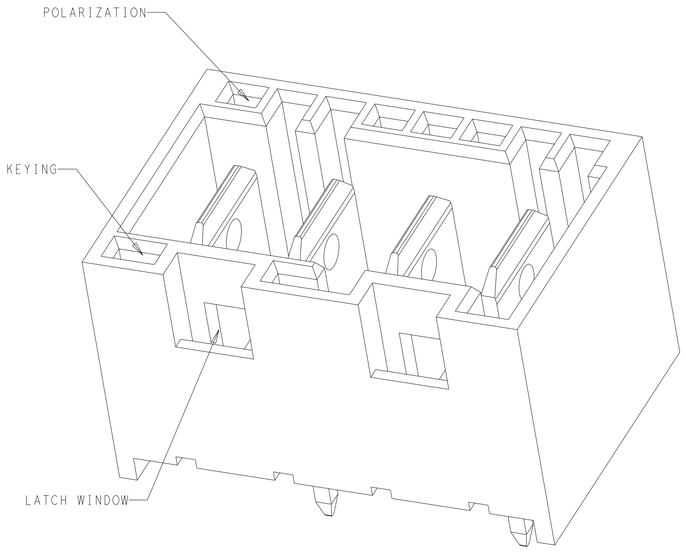

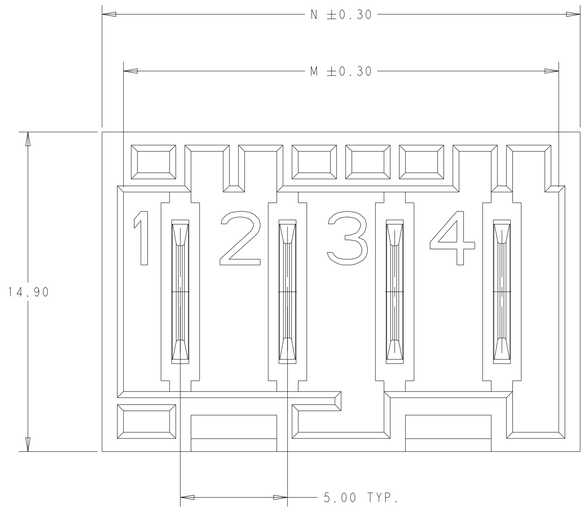

NOTES:

1. HOUSING HAS RAST 5 COMPLIANT KEYING, LATCHING, AND POLARIZATION TAB IS 6.30 X 0.8, HOWEVER THE LOCATION OF THE TAB HOLE DOES NOT MEET DIN 46244
2. SEE SHEET 2 FOR AVAILABLE CONFIGURATIONS
3. MATERIAL: HOUSING, NYLON, UL94 V0, 750°C GWT NO FLAME
   CONTACT: COPPER ALLOY, 0.8MM THICK
4. FINISH: CONTACTS, MATTE TIN PLATING OVERALL, NICKEL UNDER-PLATING
5. INVOLVED PARTS NOT HAVE THE SAME PCB LAYOUT AS GENERAL VERSION. PCB TABS INSERTED IN A STAGGERED PATTERN BEGINNING WITH POSITION 1 AS SHOWN (PCB HOLE POSTION FOR TAB 1 IS FIXED).
6. DIMENSION OFF OF LAST POSITION REGARDLESS OF EVEN OR ODD POSITION HEADER
7. PACKAGING: LOOSE PIECE
8. PRELIMINARY PART - NOT RELEASED FOR PRODUCTION
   THIS PRODUCT HAS NOT COMPLETED QUALIFICATION TESTING
9. INVOLVED PARTS HAVE NOT THE SAME PCB LAYOUT

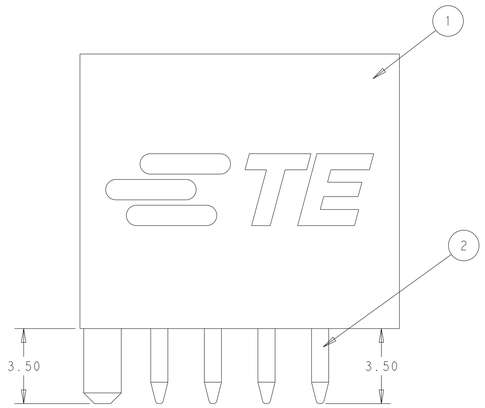

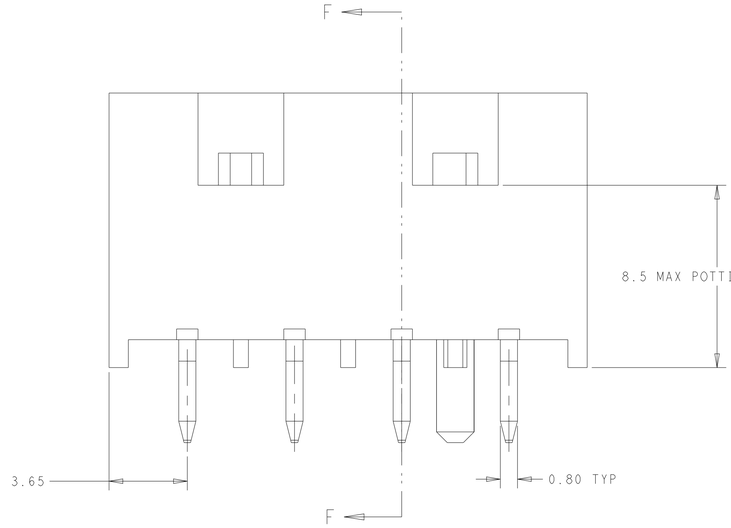

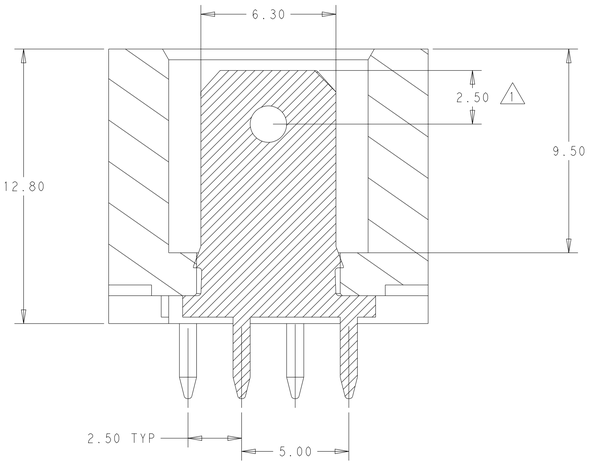

SECTION F-F

10. TOOL MARK ON TERMINAL SURFACE IS ACCEPTABLE WHICH DOES NOT IMPACT FUNCTION

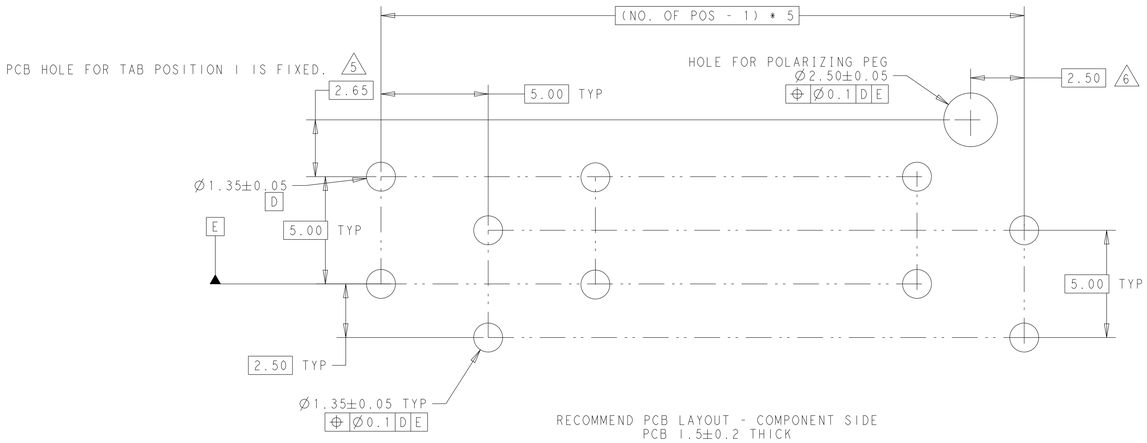

RECOMMEND PCB LAYOUT - COMPONENT SIDE
PCB 1.5±0.2 THICK

30.30	32.30	6
25.30	27.30	5
20.30	22.30	4
15.30	17.30	3
10.30	12.30	2
M	N	NO. OF POS.

THIS DRAWING IS A CONTROLLED DOCUMENT.

DIMENSIONS: mm

TOLERANCES UNLESS OTHERWISE SPECIFIED:
0 PLC ±-
1 PLC ±-
2 PLC ±0.25
3 PLC ±-
4 PLC ±-
ANGLES ±3°

MATERIAL: SEE NOTES -
FINISH: SEE NOTES -

DWN J. POTERJOY 09APR2015
CHK F. LUPO 09APR2015
APVD R. ROBONE 09APR2015
PRODUCT SPEC 108-106080
APPLICATION SPEC -
WEIGHT -

TE Connectivity

NAME RAST 5 HDR ASSY, POSITIVE-LOCK SHROUDED, VERTICAL

SIZE	CAGE CODE	DRAWING NO	RESTRICTED TO
A1	-	C-2292457	-

CUSTOMER DRAWING | SCALE 7:1 | SHEET 1 OF 2 | REV B6

THIS DRAWING IS UNPUBLISHED. RELEASED FOR PUBLICATION 20
© COPYRIGHT 20 BY - ALL RIGHTS RESERVED.

REVISIONS

P	LTR	DESCRIPTION	DATE	DWN	APVD
	-	SEE SHEET 1	-	-	-

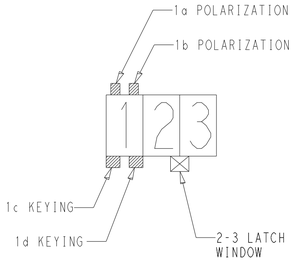

PICTORIAL VIEW KEY

LAYOUT	COLOR	QTY	TAB CONTACT	QTY	HEADER HOUSING	NO. OF POS	RESIN A	RESIN B
							TE PART NO.	
	NATURAL	5	POSITIVE-LOCK TAB CONTACT WITH MATTE TIN PLATING (2)	1	RAST 5 TAB HEADER HOUSING (1)	6	/	1-2390868-6 (8)
	NATURAL	6		1		6	/	2390868-6
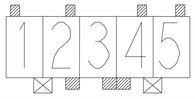	NATURAL	5		1		5	1-2292457-5	/
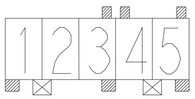	NATURAL	5		1		5	2292457-5	/
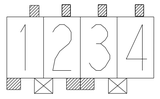	NATURAL	4		1		4	3-2292457-4	3-2390868-4
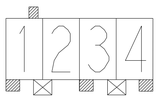	NATURAL	4		1		4	1-2292457-4 (8)	/
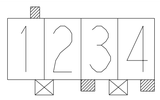	NATURAL	4		1		4	2292457-4	2390868-4
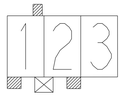	NATURAL	3		1		3	1-2292457-3	/
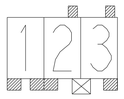	NATURAL	3		1		3	2292457-3	2390868-3
	BLACK	2		1		2	3-2292457-2 (8)	/
	NATURAL	2		1		2	1-2292457-2	1-2390868-2
	NATURAL	2		1		2	2292457-2	2390868-2

THIS DRAWING IS A CONTROLLED DOCUMENT.

DIMENSIONS: mm

TOLERANCES UNLESS OTHERWISE SPECIFIED:
0 PLC ±-
1 PLC ±-
2 PLC ±0.25
3 PLC ±-
4 PLC ±-
ANGLES ±3°

MATERIAL SEE NOTES -

FINISH SEE NOTES -

DWN J. POTERJOY 09APR2015
CHK F. LUPO 09APR2015
APVD R. ROBONE 09APR2015
PRODUCT SPEC 108-106080
APPLICATION SPEC -
WEIGHT -

TE Connectivity

NAME RAST 5 HDR ASSY, POSITIVE-LOCK SHROUDED, VERTICAL

SIZE	CAGE CODE	DRAWING NO	RESTRICTED TO
A1	-	C-2292457	-

CUSTOMER DRAWING | SCALE 7:1 | SHEET 2 OF 2 | REV B6