REV	
A	0528-004-3805

REVISIONS			
SYM	DESCRIPTION	DATE	APPROVED
NC	NEW RELEASE PER E.O. P18217	6/23/03	C.W.
A	REVISED PER E.O. P18402	12/8/03	

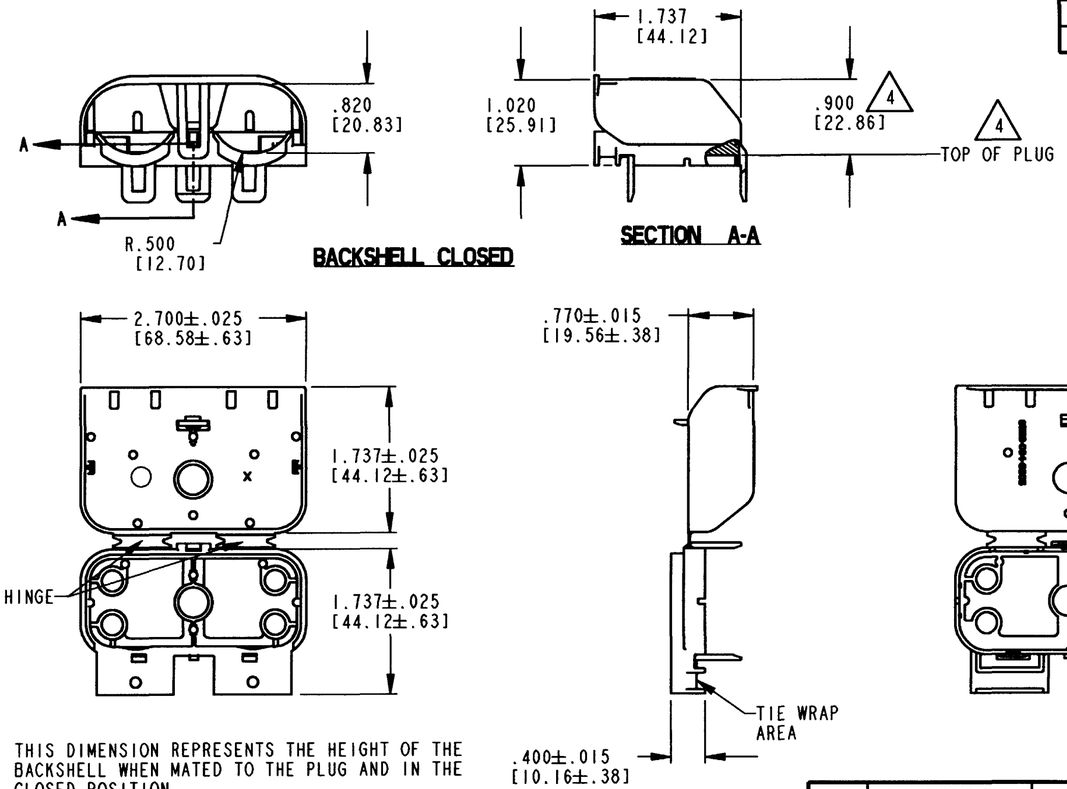

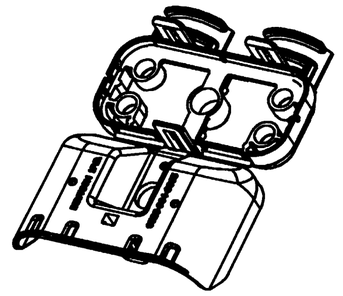

3D VIEWS

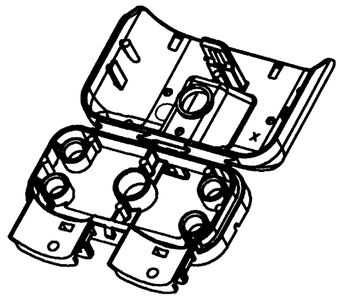

4. THIS DIMENSION REPRESENTS THE HEIGHT OF THE BACKSHELL WHEN MATED TO THE PLUG AND IN THE CLOSED POSITION.
3. THIS PART MATES WITH THE DRC26-38S01 THRU 10.
2. DIMENSIONS WITHOUT TOLERANCE ARE FOR REFERENCE ONLY.
1. ALL DIMENSIONS ARE IN INCHES [mm].

NOTES:

	SIGNATURE & DATE
DR	M. GONZALEZ 6/16/03
CHK	
PE	12/8/03
APPD	12/8/03
SCALE	NONE WT

90° BACKSHELL FOR
38 PIN PLUG
DRC SERIES

ENVELOPE

CP | MATL. CODE

The Deutsch Company
DEUTSCH I.P.D.
3850 INDUSTRIAL AVE.
HEMET, CALIF. 92545

B | 0528-004-3805

DWG SIZE | CODE 11139 | SHEET 1 OF 1