© – TE Connectivity. All Rights Reserved.

| REVISIONS | | | | | |
|---|---|---|---|---|---|
| P | LTR | DESCRIPTION | DATE | DWN | APVD |
| | C | REV PER ECN-25-315337 | 07APR2025 | JAB | MN |

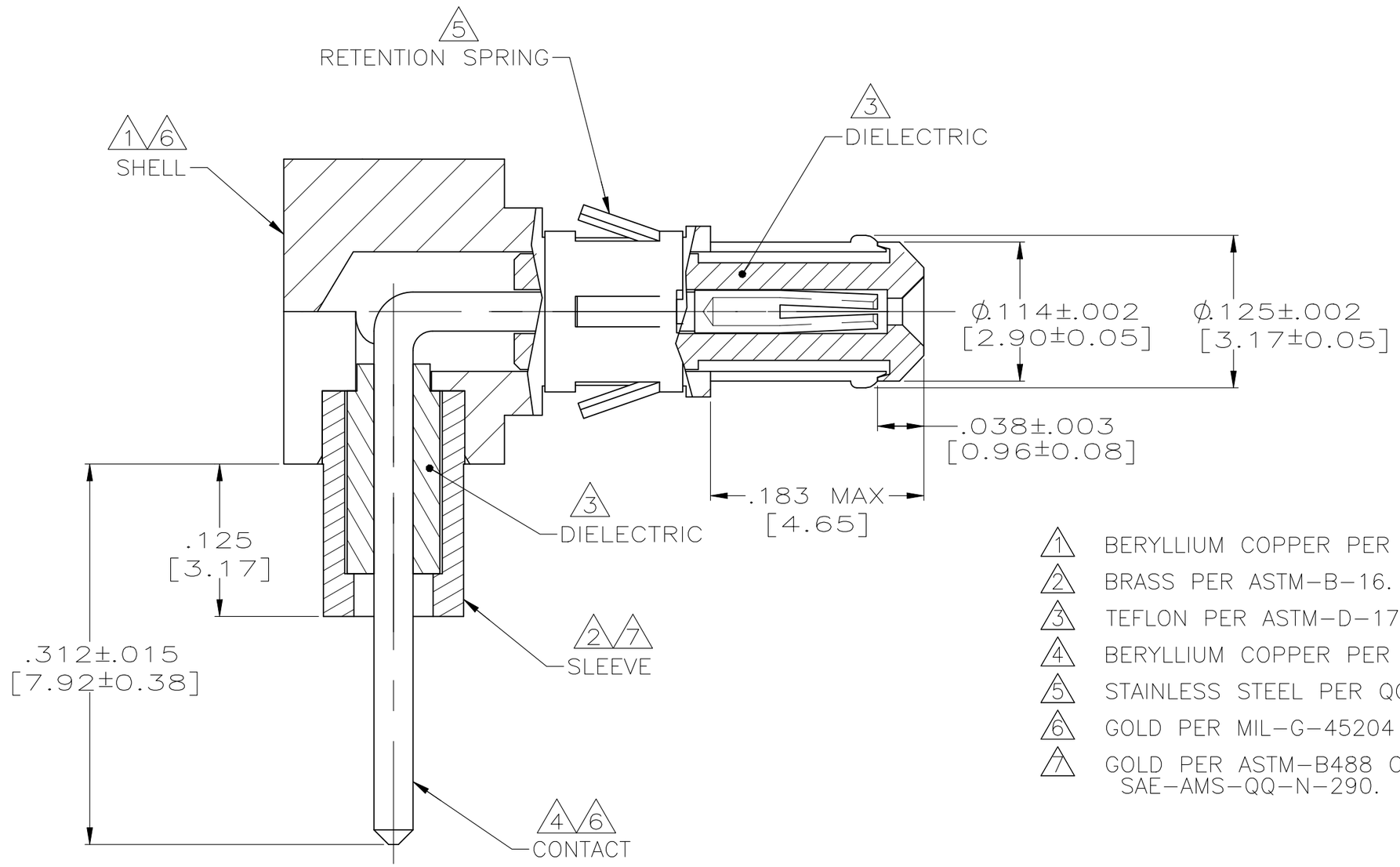


1. BERYLLIUM COPPER PER ASTM-B-196.
2. BRASS PER ASTM-B-16.
3. TEFLON PER ASTM-D-1710.
4. BERYLLIUM COPPER PER ASTM-B-197.
5. STAINLESS STEEL PER QQ-S-766
6. GOLD PER MIL-G-45204 OVER NICKEL PER QQ-N-290.
7. GOLD PER ASTM-B488 OVER NICKEL PER SAE-AMS-QQ-N-290.

449864-1

PART NO.

THIS DRAWING IS A CONTROLLED DOCUMENT.

DIMENSIONS: INCHES

TOLERANCES UNLESS OTHERWISE SPECIFIED:

| | |
|---|---|
| 0 PLC | ± – |
| 1 PLC | ± – |
| 2 PLC | ± – |
| 3 PLC | ± .005 [0.13] |
| 4 PLC | ± – |
| ANGLES | ± – |

MATERIAL: SEE CALLOUTS

FINISH: SEE CALLOUTS

| | |
|---|---|
| DWN | C.C.THOMAS 3-15-94 |
| CHK | J.CABARLO 3-15-94 |
| APVD | J.CABARLO 3-15-94 |
| PRODUCT SPEC | – |
| APPLICATION SPEC | – |
| WEIGHT | 0.000000 |

TE Connectivity

NAME: PIN ASSY,RT ANGLE,MICROMINIATURE
–

| SIZE | CAGE CODE | DRAWING NO | RESTRICTED TO |
|---|---|---|---|
| A3 | 00779 | C-449864 | – |

CUSTOMER DRAWING

| SCALE | SHEET | REV |
|---|---|---|
| 10:1 | 1 OF 1 | C |

1470-19 (1/15)

CUSTOMER DRAWING