THIS DRAWING IS UNPUBLISHED. RELEASED FOR PUBLICATION ,19 .
DIFFUSION RESEINTE AMP
© COPYRIGHT BY TYCO ELECTRONICS CORPORATION ALL RIGHTS RESERVED. TOUS DROITS RESERVES.

LOC	DIST
F	7

REVISIONS

P	LTR REV	DESCRIPTION MODIFICATIONS	DATE	DWN DESS.	APVD APP.
	D	REACTIVATE -5	16-NOV-04	JJD	–
	E	UPDATE	01-FEB-05	JJD	–

1. PARTS PACKAGED UNASSEMBLED
2. THREE SAFTEY WIRE HOLES ø0.61 [.024] MINIMUM, EQUALLY SPACED AROUND CIRCUMFERENCE
3. CRIMP TOOL: 220045-2
4. SEE I.S. 408-2028-5

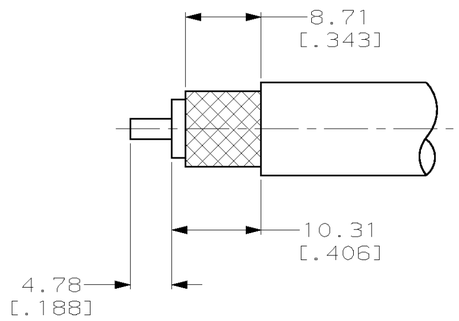

RECOMMENDED STRIP LENGTH

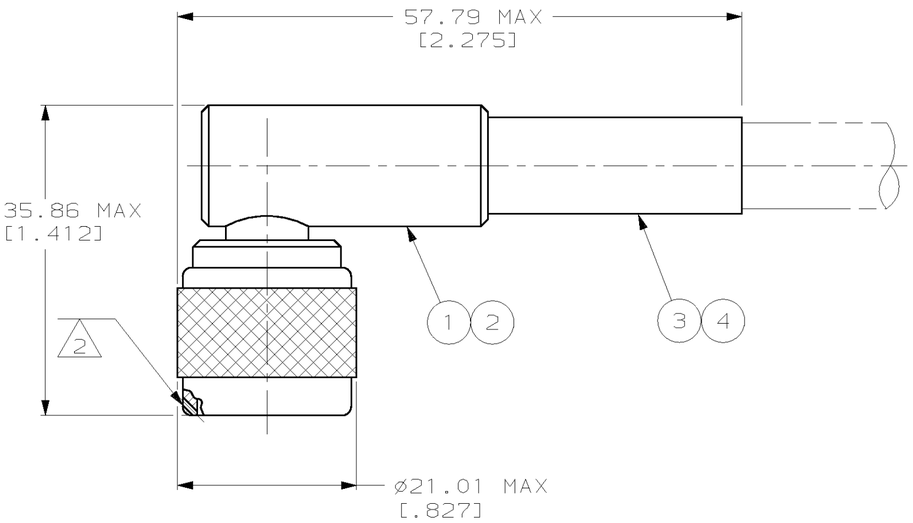

	FILECA F1703/94 & FILOTEX 50 MFCFB	225908-1	331256	1-51704-0	225249-1	225365-5
SUPERSEDED BY 225394-2	RG-142/U,142A/U & 142B/U	–	225382-2	225106-3	225383-1	225365-4
OBSOLETE	–	–	–	–	–	225365-3
SUPERSEDED BY 225394-1	RG-55/U & 223/U	–	225382-2	225106-1	225383-1	225365-2
SUPERSEDED BY 225394-4	RG-58A/U & 58C/U	–	225381-2	225106-1	225383-1	225365-1
	CABLE SIZE	(4) GASKET QTY=1	(3) FERRULE QTY=1	(2) CONTACT QTY=1	(1) PLUG ASSY QTY=1	PART NUMBER

THIS DRAWING IS A CONTROLLED DOCUMENT.
CE PLAN EST UN DOCUMENT CONTROLE.

DIMENSIONS: mm

TOLERANCES UNLESS OTHERWISE SPECIFIED: TOLERNACES NON SPECFIEES (SUIV NB DE DECIMALES):
0 ~~PLC/DEC~~ ±
1 ~~PLC/DEC~~ ±-
2 ~~PLC/DEC~~ ±0.41
3 ~~PLC/DEC~~ ±
4 ~~PLC/DEC~~ ±
ANGLES ±-

MATERIAL MATIERE –
FINISH FINITION –

DWN/DESSINE 16-NOV-04 JJ-DESPRETZ
CHK/VERIFIE – Y-PETRONIN
APVD/APPROUVE 16-NOV-04 Y-PETRONIN
PRODUCT SPEC SPEC. PRODUIT 108-12019
APPLICATION SPEC SPEC. APPLICATION –
WEIGHT MASSE APPROX. 70 gr

tyco Electronics
TYCO ELECTRONICS FRANCE SAS
BP 39, 95301 CERGY-PONTOISE CEDEX

NAME TITRE PLUG, RIGHT ANGLE SERIES N

SIZE FORMAT	CAGE CODE	DRAWING NO TITRE	RESTRICTED TO
A2	00779	C-225365	–

CUSTOMER DRAWING/PLAN CLIENT UNIQUEMENT POUR REFERENCE | SCALE ECHELLE 1:1 | SHEET FEUILLE 1 OF DE 1 | REV E