Tyco Electronics

MANUFACTURING INSTRUCTIONS

C11-3SBH1276A2
0-1617516-8

FINAL ASSY : INT: 44C270290-G07
44C270259-001

ROUT.: 3SBHMX01

ENCL.: 44A270949-G01

MOTOR ASSY : 44B271040-G06

HEADER :
ASSY 44B272930-G08
P/N 44B272929-001
GAP .003-.0045 IN.
BCP 6.0-7.0 GMS

COIL: 44A273037-G11
RES. 720 OHMS

DESCRIPTION	PART NO.	QTY

ELECTRICAL ADJUST:

M.O. NI. _____

	OTR	ADJ	IBC	FINAL	
NOM.				26.5	VDC
M.O.	18.0	13.0	13.0	13.5	VDC
M.N.O.					VDC
HLD.	10.8	7.7	7.8	8.1	VDC
REL.	0.9	1.7	1.56	1.5	VDC

OP TIME 4.0 MS MAX OCST 2.0 MS MAX

RL TIME 6.0 MS MAX RCST 2.0 MS MAX

INSPECTION:

	PROGRAM	FIXTURE
FINAL	F10423M1	J001
	10423H	J50
MISS	10423C	J50
AUDIT	P10423	J001

CUST. –

DWG. M39016/53-026L

REV. –

YES/NO AS REQUIRED

YES	MASS SPECTROMETER 100%
YES	MISS TEST 100% THERMAL
NO	NON-STD GAS TYPE _____ PSI _____
YES	VIBRATION SCAN 100%
YES	MOISTURE TEST AQL
YES	PLATE PER RP28000 G04

NO	REVISIONS
A	INITIAL RELEASE:
B	MODIFIED PER ECO-05-014370 MSG 11.21.05: TWH 2.20.06
C	MODIFIED COIL RES SETTINGS PER ECO-08-022283 GTB 8Sep09; TWH 21Jan08

GTB

SPECIAL INSTRUCTIONS:

SPECIAL TESTS:

SPECIAL PARTS:

SCHEMATIC

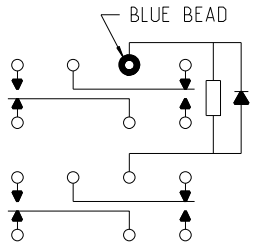

SINGLE DIODE

MARKINGS:

SIDE
A/SIDE _____
NP-BH1276A2

E/TOP 44B273131-2
LOCATION PER:
44B273131

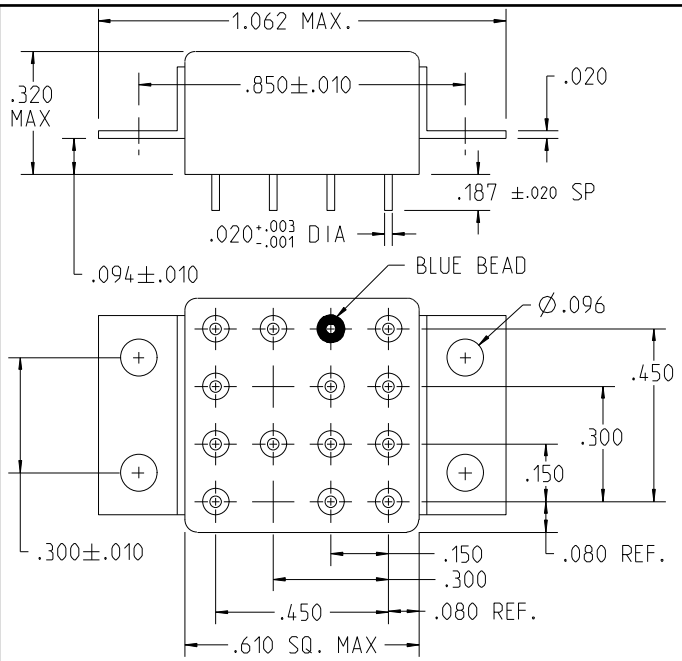

DRWN. TWH 20Feb06
APPD. MSG 23Feb06
Q.A. WFB 3Mar06
ACTIVE

C11-3SBH1276A2
0-1617516-8