THIS DRAWING IS UNPUBLISHED. RELEASED FOR PUBLICATION 2013
© COPYRIGHT 2013 TE CONNECTIVITY ALL RIGHTS RESERVED.

LOC	DIST
-	-

REVISIONS

P	LTR	DESCRIPTION	DATE	DWN	APVD
	C	REVISED PER ECO-13-013634	8-26-13	RLM	DM
	C1	REVISED PER ECO-14-005288	4-9-14	PV	DM
	G	REVISED PER PCN-23-190134	29SEP2023	GB	CB
	G1	REVISED PER PCN-25-261461	05NOV2025	AJ	MB

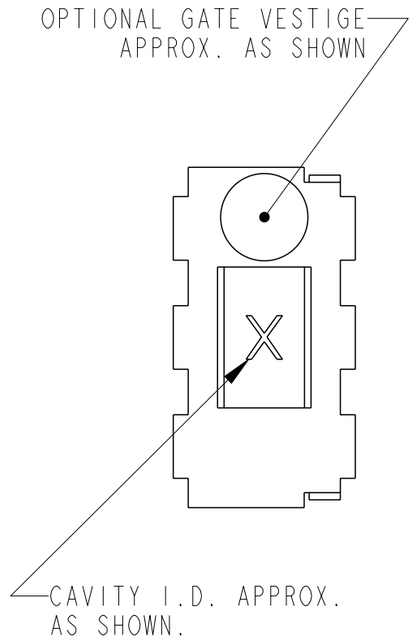

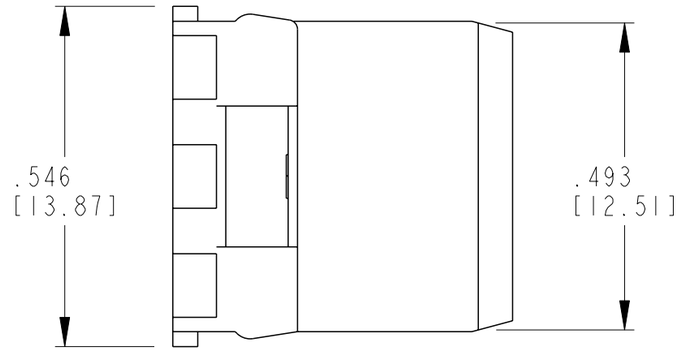

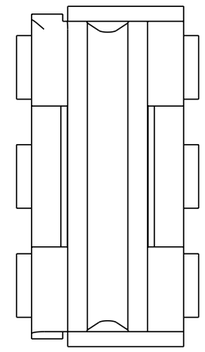

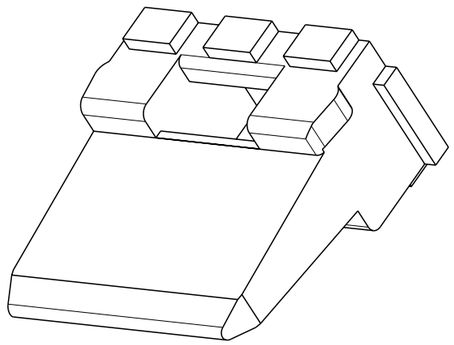

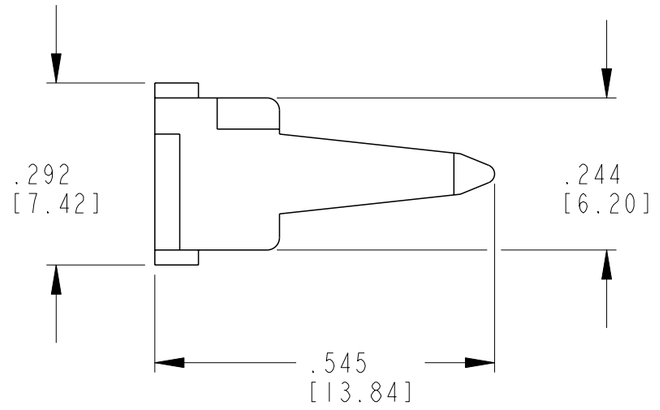

1. USED WITH DT04-6P-XXXX (XXXX = ALL MODIFICATIONS).
CONSULT FACTORY FOR MODIFICATIONS AND APPLICATION.

THIS DRAWING IS A CONTROLLED DOCUMENT.

DIMENSIONS: INCHES[mm]

TOLERANCES UNLESS OTHERWISE SPECIFIED:
0 PLC ±-
1 PLC ±-
2 PLC ±-
3 PLC ±0.025 [0.64]
4 PLC ±-
ANGLES ±0°30'0"

MATERIAL PBT GF30 GREEN

FINISH -

DWN R.MESSENGER 16AUG2013
CHK R.MESSENGER 28MAR2014
APVD D.MEYER 28MAR2014
PRODUCT SPEC 108-151009
APPLICATION SPEC 114-151009
WEIGHT 0.84 g

CUSTOMER DRAWING

TE Connectivity

NAME
WEDGELOCK
6 WAY RECEPTACLE
DT SERIES

SIZE	CAGE CODE	DRAWING NO	RESTRICTED TO
A3	4AFU8	C-W6P	-

SCALE 4:1 SHEET 1 OF 1 REV G1