REVISIONS			
REV	DESCRIPTION	DATE	APPV
A	PRODUCTION RELEASE	AJVM 9/15/2022	

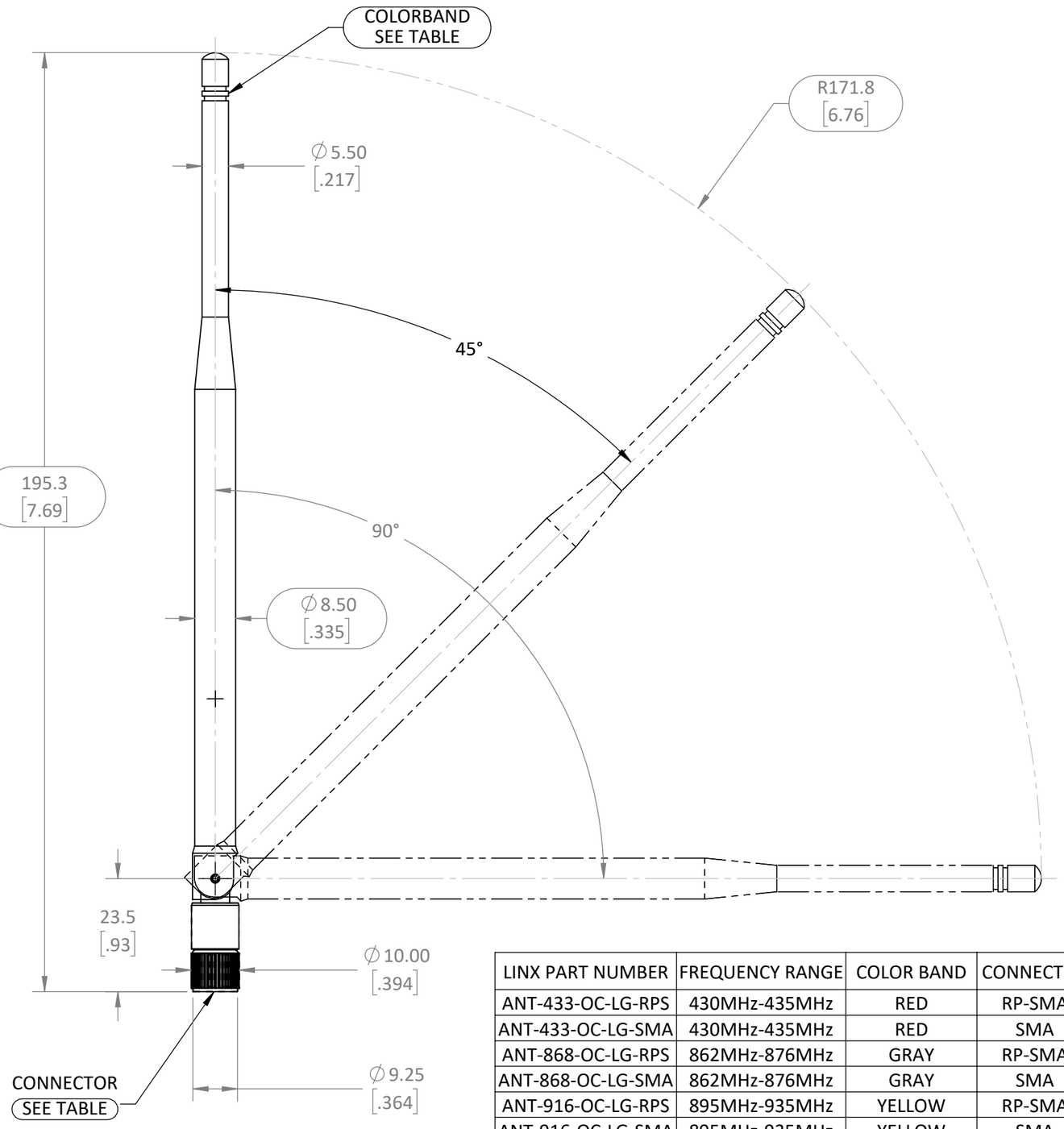

LINX PART NUMBER	FREQUENCY RANGE	COLOR BAND	CONNECTOR
ANT-433-OC-LG-RPS	430MHz-435MHz	RED	RP-SMA
ANT-433-OC-LG-SMA	430MHz-435MHz	RED	SMA
ANT-868-OC-LG-RPS	862MHz-876MHz	GRAY	RP-SMA
ANT-868-OC-LG-SMA	862MHz-876MHz	GRAY	SMA
ANT-916-OC-LG-RPS	895MHz-935MHz	YELLOW	RP-SMA
ANT-916-OC-LG-SMA	895MHz-935MHz	YELLOW	SMA
ANT-2.4-OC-LG-RPS	2.39GHz-2.55GHz	PURPLE	RP-SMA
ANT-2.4-OC-LG-SMA	2.39GHz-2.55GHz	PURPLE	SMA

NOTES: (UNLESS OTHERWISE SPECIFIED)

1. ALL DIMENSIONS ARE IN MILLIMETERS [IN].
2. DIMENSIONS APPLY AFTER FINISHING.
3. MANUFACTURE TO BE COMPLIANT WITH EU RoHS DIRECTIVE, USE MATERIALS THAT DO NOT CONTAIN REACH SUBSTANCES OF VERY HIGH CONCERN >1000ppm, AND USE DRC CONFLICT-FREE SOURCED MATERIALS.
4. ELECTRICAL SPECIFICATIONS ARE LISTED FOR REFERANCE ONLY. SEE LINX DATA SHEET FOR ELECTRICAL PROPERTIES.
    1. IMPEDANCE: 50Ω
    2. FREQUENCY: SEE TABLE
    3. POLARIZATION: LINEAR
    4. RADIATION: OMNIDIRECTIONAL
5. MECHANICAL:
    1. RPS INTERFACE TYPE PER [SPC-CON-IFC-RPS]
    2. SMA INTERFACE TYPE IAW [MIL-STD-348B]
    3. OPERATING TEMPERATURE: -20°C TO +85°C
6. PRODUCT QUALIFIED IAW LINX TEST PLAN AT CURRENT REVISION.
7. UNLISTED DIMENSIONS ARE CONTROLLED BY SOLID MODEL AT

WARNING: THIS DRAWING CONTAINS PROPRIETARY INFORMATION THAT IS THE SOLE PROPERTY OF LINX TECHNOLOGIES, AND SHALL BE TREATED AS SUCH. NO DISCLOSURE OR REPRODUCTION OF THIS DOCUMENT IS PERMITTED, IN WHOLE OR IN PART, WITHOUT THE EXPRESS WRITTEN PERMISSION OF LINX TECHNOLOGIES OR ITS DESIGNATED AGENTS.

MATERIAL:

INTERPRET DIMENSIONS AND TOLERANCES PER ASME Y14.5.
.X ±2.0
.XX ±1.0
.XXX ±.500
ANGLES: ±1°
SURFACE: 32

PROJECTION:

WEIGHT:

FINISH:

DRAWN: AJVM DT: 9/15/2022

ENGR: DASARATHAN DT: 9/16/2022

TE connectivity
159 ORT LANE
MERLIN, OR 97532

TITLE:
ANTENNA OC TYPE
RIGHT ANGLE SWIVEL WHIP

SIZE	DWG. NO.	REV
B	C-ANT-FFF-OC-LG-CCC	A

SCALE: 1:1 | DO NOT SCALE DRAWING | SHEET 1 OF 1

LDCFDFB_B