C. Wealtch 10-15-92	4
APPROVED BY/DATE	REV

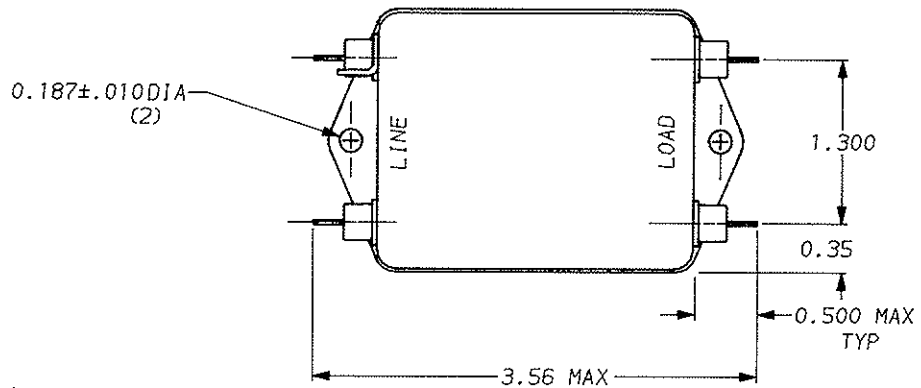

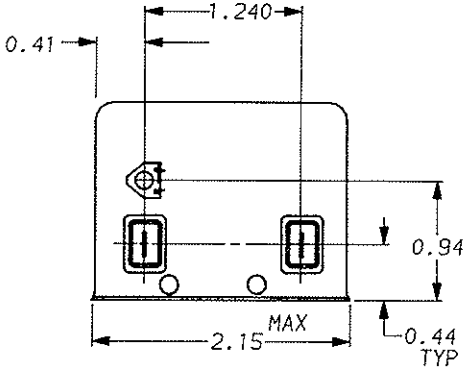

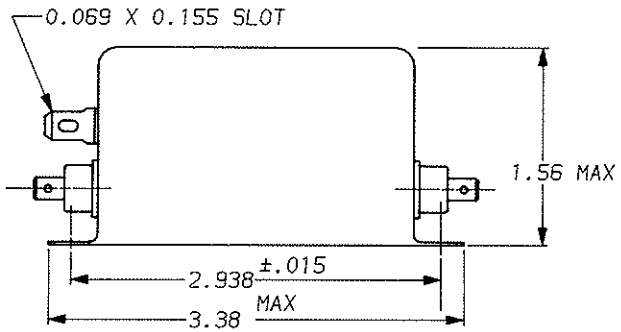

SAFETY ORGANIZATION(S):

THIS FILTER HAS BEEN FORMALLY RECOGNIZED, CERTIFIED OR APPROVED BY THE LISTED AGENCY. THEREFORE, ALL TEST/REQUIREMENTS SPECIFIED IN THE LATEST REVISION OF THE FOLLOWING AGENCY STANDARDS HAVE BEEN MET:

UL RECOGNIZED	UL 1283
CSA CERTIFIED	CSA 22.2, NO.0,0.4,8
VDE APPROVED	VDE 565-3

OPERATING SPECIFICATIONS:

LINE VOLTAGE/CURRENT:	6 AMP., 120/250 VAC 5 AMP/40°C, 250 VAC
LINE FREQUENCY:	50-60Hz
MAX. LEAKAGE CURRENT, EACH LINE TO GROUND	.3mA @ 120V 60Hz .5mA @ 250V 50Hz
OPERATING AMBIENT TEMP. RANGE:	-10°C TO +40°C @ RATED CURRENT, I_r

IN AN AMBIENT, T_a, HIGHER THAN 40°C, THE MAXIMUM OPERATING CURRENT, I_o, IS AS FOLLOWS:

$$I_o = I_r \sqrt{\frac{85-T_a}{45}}$$

RELIABILITY SPECIFICATIONS:

STORAGE TEMPERATURE:	-25°C TO +85°C
HUMIDITY:	21 DAYS @ 40°C 95% RH
CURRENT OVERLOAD TEST:	6 TIMES RATED CURRENT FOR 8 SECONDS

TEST SPECIFICATIONS:

INDUCTANCE:	4.6 mH NOMINAL
CAPACITANCE: (MEASURED @ 1 KHz, 0.25 VAC MAX., 25°C ±1°C)	
LINE TO GROUND:	.004µF ±20%
LINE TO LINE:	.57µF ±20%
DISCHARGE RESISTOR:	560KΩ
LINE/GROUND AND LINE/LINE INSULATION RESISTANCE (W/O DISCHARGE RESISTOR)	6000 MΩ (MIN) AT 100 VDC 20°C AND 50% RH

RECOMMENDED RECEIVING INSPECTION HIPOT:

LINES TO GROUND:	2250 VDC FOR 1 MINUTE
LINE TO LINE:	1450 VDC FOR 1 MINUTE

FILTER APPROVAL:

THE BEST WAY TO SELECT AND QUALIFY A FILTER IS FOR YOUR ENGINEERING TO TEST THE UNIT IN YOUR EQUIPMENT.

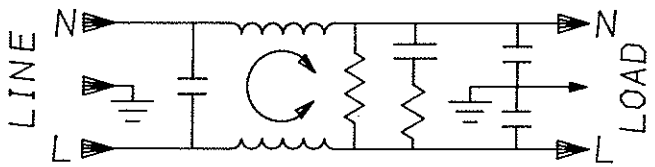

50Ω - 50Ω (MINIMUM) INSERTION LOSS

FREQUENCY MHz	.01	.05	.07	.1	.15	.5	1	5	10	20	30
COMMON dB	6	19	23	25	29	48	44	43	43	40	40
DIFF. dB	4	6	10	24	37	66	75	72	60	50	50

TOLERANCE EXCEPT AS NOTED

DECIMAL: .XXX .XX .X ANGLES
ENGLISH: ±.025 ± 1°
METRIC: ± ——

MATERIAL: AS SUPPLIED

FINISH:

This document is proprietary to CORCOM INC. and is not to be reproduced nor used for manufacturing purposes except on CORCOM's order or prior written consent.

corcom
LIBERTYVILLE, IL 60048

POWER LINE FILTER

SCALE	DATE	DRG. NO.	REV.
NTS	5-12-88	6EG1.	04
DRN. BY: TDL	ORIGINATOR: CW		