THIS DRAWING IS UNPUBLISHED. RELEASED FOR PUBLICATION 2000
© COPYRIGHT 2000 BY TYCO ELECTRONICS CORPORATION. ALL RIGHTS RESERVED.

LOC	DIST
GW	–

REVISIONS

P	LTR	DESCRIPTION	DATE	DWN	APVD
	01	-	29MAY2001	BL	RL
	02	Tentative	01JUN2001	BL	RL
	03	SR10-0357-02	25JUL2002	KM	RL

1) Dimensions of mating face according to IEC 169-29 and CECC 22230

2) Full Crimp version : Center conductor sq 1.4 or 8 indent
Outer conductor hex 6.8

△3 Max. dimensions

△4 DIN ISO 8015 ; DIN ISO 2768-m-R

△5 Mechanical reference plane

△6 Packaging : 250 pieces per box.
Body and loose parts seperately packed into plastic bags.

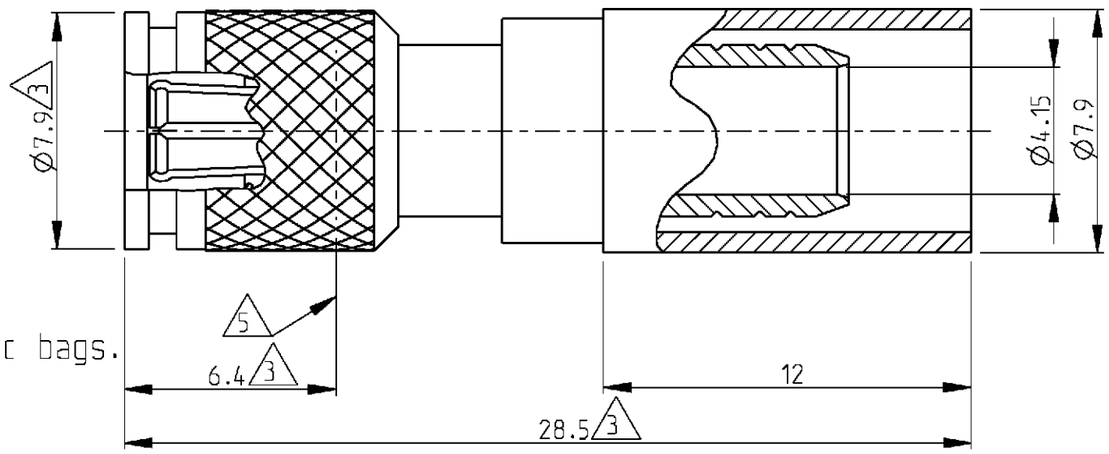

Cable preparation for cable type LMR-240 FR

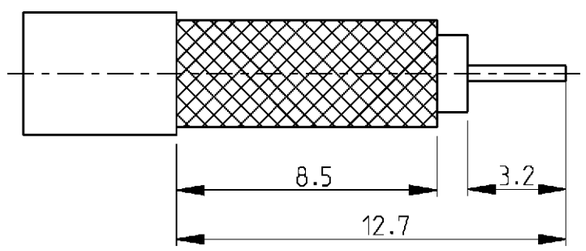

Cross reference table

Part number	Cable type	Description	Material	Plating	Packaging
1460010-1	LMR-240 FR	Body	Brass	1 µm Au min in contact area	△6
		Center conductor	CuBe	-	
		Dielectric	PTFE	1 µm Au min in contact area	

THIS DRAWING IS A CONTROLLED DOCUMENT FOR TYCO ELECTRONICS CORPORATION IT IS SUBJECT TO CHANGE AND THE CONTROLLING ENGINEERING ORGANIZATION SHOULD BE CONTACTED FOR THE LATEST REVISION.

DIMENSIONS: mm

TOLERANCES UNLESS OTHERWISE SPECIFIED:
0 PLC ±
1 PLC ±
2 PLC ± △4
3 PLC ±
4 PLC ±
ANGLES ±

MATERIAL –

FINISH –

DWN B Lenvain	22NOV2000
CHK F. Hellin	29NOV2000
APVD R. Leeman	29NOV2000
PRODUCT SPEC	–
APPLICATION SPEC	114-90009
WEIGHT	–

tyco Electronics
Tyco Electronics
Oostkamp - Belgium

NAME
1.0/2.3 Cable plug
Snap_Lock; Zo=50 ohm
for cable LMR-240 FR

SIZE	CAGE CODE	DRAWING NO	RESTRICTED TO
A3	00779	C-1460010	–

CUSTOMER DRAWING | SCALE 5/1 | SHEET 1 OF 1 | REV 03