THIS DRAWING IS UNPUBLISHED RELEASED FOR PUBLICATION 2016
© COPYRIGHT 1999 BY TE CONNECTIVITY ALL RIGHTS RESERVED.

REVISIONS					
P	LTR	DESCRIPTION	DATE	DWN	APVD
	C	REVISED PER PCN-23-192205	11APR2024	PS	CB
	G	REVISED PER PCN-24-210155	09SEP2024	AJ	CB
	G1	REVISED PER PCN-25-243104	30APR2025	AJ	MB
	H	REVISED PER PCN-25-236481	25JUN2025	AJT	MB

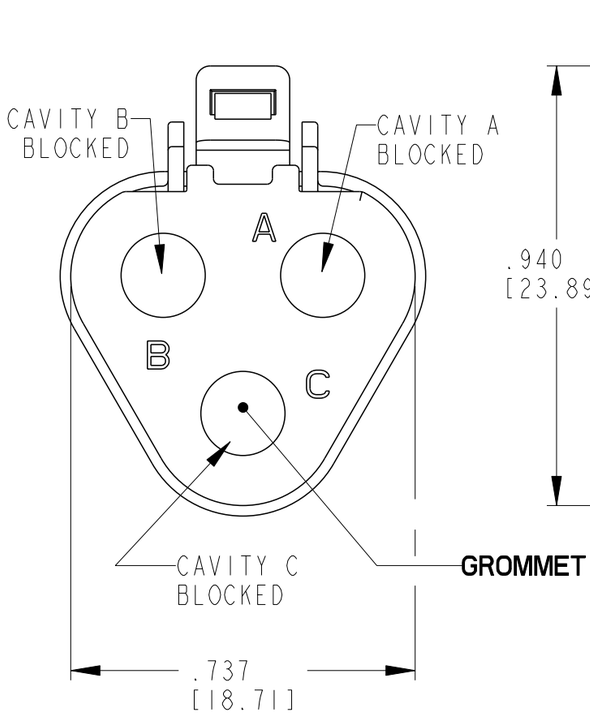

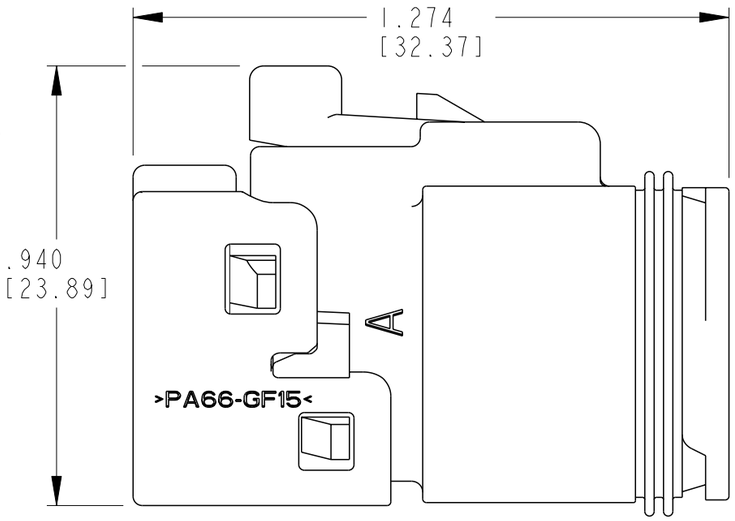

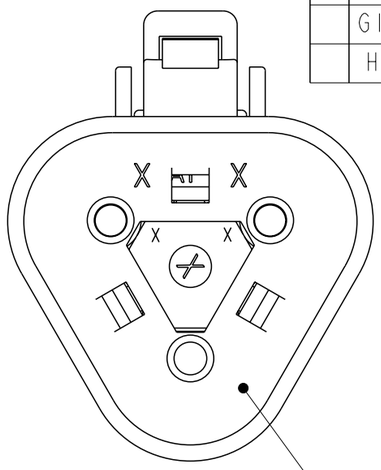

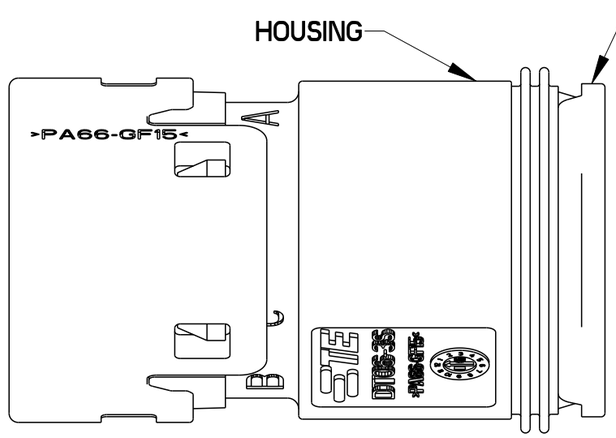

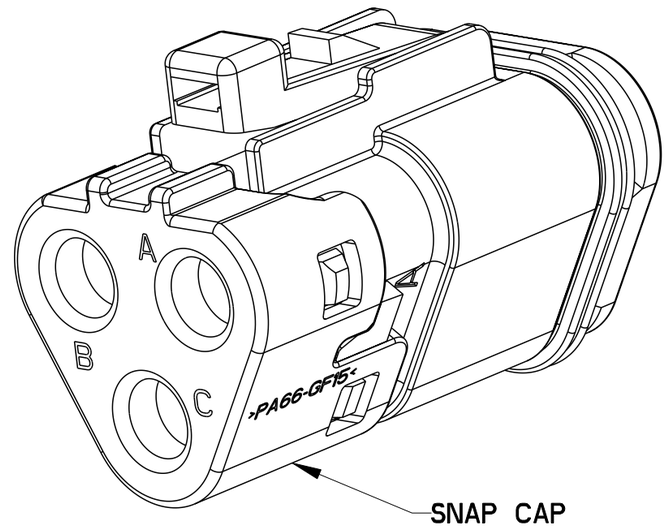

4. RESISTOR CHARACTERISTICS: 120 OHMS±10 PERCENT, .4 WATTS MINIMUM INSERTED INTO CAVITIES A AND B.

3. THIS CONNECTOR CAN PASS THRU A ONE INCH [25.44] HOLE.

2 MATERIAL: HOUSING:PA66 GF15, (GRAY)
CAP: PA66 GF15, (BLACK)
GROMMET: VMQ (RED-ORANGE)
FRONT SEAL: VMQ (RED-ORANGE)
WEDGE LOCK: PBT GF30 (BLUE)
SOCKET TERMINAL: COPPER ALLOY; GOLD PLATED

1. THIS PLUG MATES WITH THE DT04-3P-XXXX RECEPTACLE. (XXXX = J1939 MODIFICATIONS.) CONSULT FACTORY FOR MODIFICATIONS. SECONDARY WEDGE LOCK W3S-1939-P012 IS KEYED AND INCLUDED TO PREVENT MISMATING AND MAY NOT MATE WITH ALL 3 WAY DT SERIES RECEPTACLES.

NOTES:

TE INTERNAL PN	DEUTSCH PN
DT06-3S-P006	DT06-3S-P006

THIS DRAWING IS A CONTROLLED DOCUMENT.

DIMENSIONS: in [mm]

TOLERANCES UNLESS OTHERWISE SPECIFIED:
0 PLC ±
1 PLC ±
2 PLC ±
3 PLC ±.025 [0.64]
4 PLC ±
ANGLES ±1°

MATERIAL 2

FINISH

DWN S.THEIS 08JUL1999
CHK V.TOMSA 08MAY2000
APVD R.READ 10MAY2000
PRODUCT SPEC 108-151009
APPLICATION SPEC 114-151009
WEIGHT 8.00g

TE Connectivity

NAME 3 WAY PLUG DT SERIES (TERMINATING PLUG), P006 MOD

SIZE	CAGE CODE	DRAWING NO	RESTRICTED TO
A3	4AFU8	C-DT06-3S-P006	-

CUSTOMER DRAWING | SCALE 3:1 | SHEET 1 OF 1 | REV H