N/C	1662-214-1631

REVISIONS			
REV	DESCRIPTION	DATE	APPROVED
N/C	NEW RELEASE PER E.O. A12052	7-11-91	JP

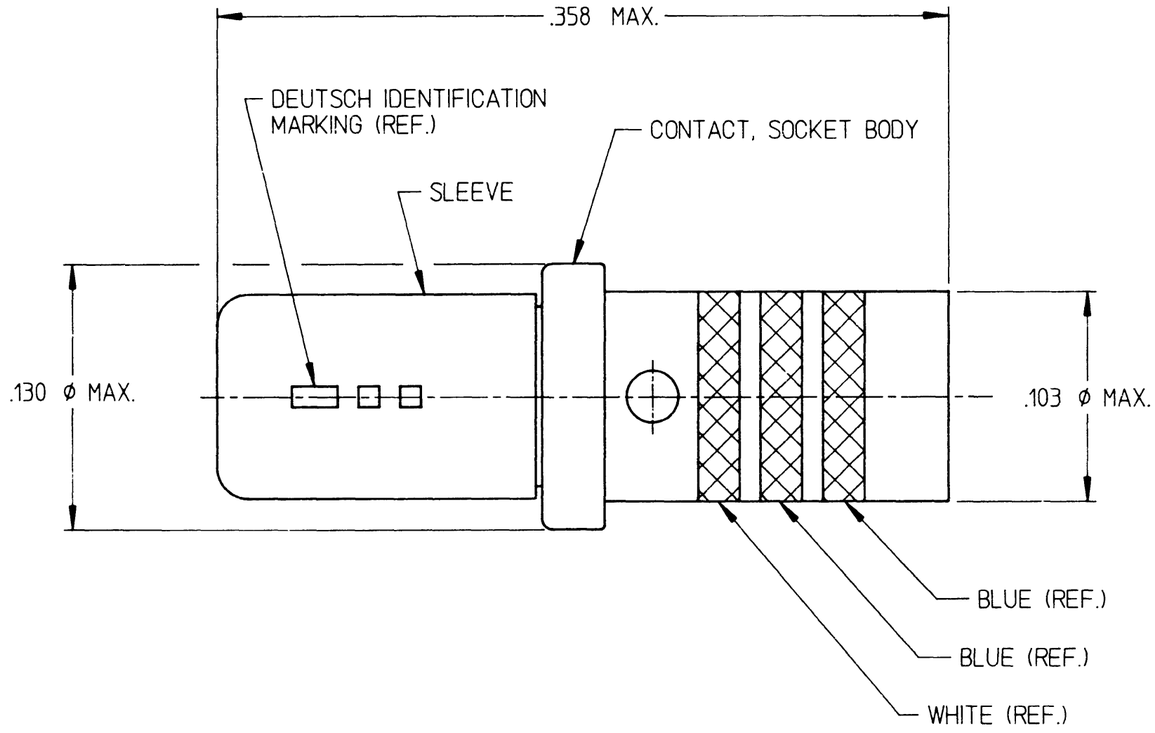

3. FINISH: BODY - GOLD PER MIL-G-45204, TYPE II, CLASS I, OVER SUITABLE UNDERPLATE (EXCLUDING SILVER)
   SLEEVE - PASSIVATED

2. MATERIAL: BODY - PER MIL-C-39029, TYPE A
   SLEEVE - STAINLESS STEEL

1. ALL DIMENSIONS ARE IN INCHES UNLESS OTHERWISE SPECIFIED.

NOTE:

	SIGNATURE & DATE
DR	HARRINGTON 07/10/91
CHK	Jo Powell 7-11-91
PE	07/10/91
APPD	
SCALE NONE	WT ———

CONTACT, SOCKET

CTS TYPE
SIZE 16
WITH SPECIAL COLOR BANDS

ENVELOPE

CP	MATL CODE

DEUTSCH
ENGINEERED CONNECTING DEVICES
Municipal Airport
Banning, California

DWG SIZE		
B	1662-214-1631	
	CODE 11139	SHEET 1 OF 1

1662214631ENV