N/C	GED00A**-**P*

REVISIONS			
REV	DESCRIPTION	DATE	APPROVED
N/C	NEW RELEASE PER E.O.A13567	7-29-94	RJE

A THREAD MAJOR DIA	A THREAD TRUNCATED	WEIGHT MAX. LBS.	INSERT ARR	SHELL SIZE	SIMILAR TO	GE PART INDENT NO	CODE IDENT NO	DEUTSCH PART NO
.557-.561	.562-24 UNEF-2A	.033	03PN	08	M83723/88	5088T81P01	11139	GED00A8-3PN
.671-.676	.688-24 UNEF-2A	.048	05PN	10	M83723/88	5088T81P02	11139	GED00A10-5PN
.857-.862	.875-20 UNEF-2A	.063	03PN	12	M83723/88	5088T81P03	11139	GED00A12-3PN
.857-.862	.875-20 UNEF-2A	.065	12PN	12	M83723/88	5088T81P04	11139	GED00A12-12PN
.919-.924	.936-20 UNEF-2A	.075	15PN	14	M83723/88	5088T81P05	11139	GED00A14-15PN
1.043-1.048	1.062-18 UNEF-2A	.091	24PN	16	M83723/88	5088T81P06	11139	GED00A16-24PN
1.043-1.048	1.062-18 UNEF-2A	.091	24P6	16	M83723/88	5088T81P07	11139	GED00A16-24P6
1.168-1.173	1.188-18 UNEF-2A	.111	31PN	18	M83723/88	5088T81P08	11139	GED00A18-31PN
1.418-1.423	1.438-18 UNEF-2A	.155	55PN	22	M83723/88	5088T81P09	11139	GED00A22-55PN
.671-.676	.688-24 UNEF-2A	.048	05P6	10	M83723/88	5088T81P10	11139	GED00A10-5P6
.857-.862	.875-20 UNEF-2A	.065	12P6	12	M83723/88	5088T81P11	11139	GED00A12-12P6
.671-.676	.688-24 UNEF-2A	.048	05P7	10	M83723/88	5088T81P12	11139	GED00A10-5P7
.671-.676	.688-24 UNEF-2A	.048	05P8	10	M83723/88	5088T81P13	11139	GED00A10-5P8
.557-.561	.562-24 UNEF-2A	.033	03P6	08	M83723/88	5088T81P14	11139	GED00A8-3P6
.557-.561	.562-24 UNEF-2A	.033	03P7	08	M83723/88	5088T81P15	11139	GED00A8-3P7
1.168-1.173	1.188-18 UNEF-2A	.111	08PN	18	M83723/88	5088T81P16	11139	INACTIVE
.919-.924	.936-20 UNEF-2A	.075	07PN	14	M83723/88	5088T81P17	11139	GED00A14-7PN
.919-.924	.936-20 UNEF-2A	.075	07P6	14	M83723/88	5088T81P18	11139	GED00A14-7P6
.857-.862	.875-20 UNEF-2A	.063	03P6	12	M83723/88	5088T81P19	11139	GED00A12-3P6
.857-.862	.875-20 UNEF-2A	.065	12P9	12	M83723/88	5088T81P20	11139	GED00A12-12P9

5. O-RING AND FACE SEAL TO BE IN ACCORDANCE WITH M50TF3564.
4. SHELL FINISH: ELECTRO DEPOSITED NICKEL PER QQ-N-290, CLASS 2, .0001 TO .0002 THICK.
3. CONTACT FINISH: .00005 MIN. THICK GOLD PER MIL-G-45204 OVER .00005 MIN. THICK NICKEL PER QQ-N-290 AS MEASURED ON CONTACT ENGAGING SURFACES. PLATING SHALL MEET THE SOLDERABILITY REQUIREMENTS OF MIL-G-45204
2. SHELL MATERIAL AMS 5647
1. ALL DIMENSIONS ARE IN INCHES UNLESS OTHERWISE SPECIFIED.

NOTE:

	SIGNATURE & DATE
DR	M. HARDY 7/6/94
CHK	R Eriksen 7-29-94
PE	John Quintero 7/29/94
APPD	8-2-94
SCALE NONE	WT

RECEPTACLE, CONNECTOR

THREADED COUPLING
SQ. FLANGE MOUNT
HERMETIC (GLASS INSERT)
NI PLATED SHELL
500°F

ENVELOPE

CP | MATL CODE

DEUTSCH
ENGINEERED CONNECTING DEVICES
Municipal Airport
Banning, California

B | GED00A**-**P*

DWG SIZE | CODE 11139 | SHEET 1 OF 2

N/C	GEDØØA**-**P*

REVISIONS			
REV	DESCRIPTION	DATE	APPROVED
N/C	NEW RELEASE PER E.O.A13567	7-29-94	[illegible]

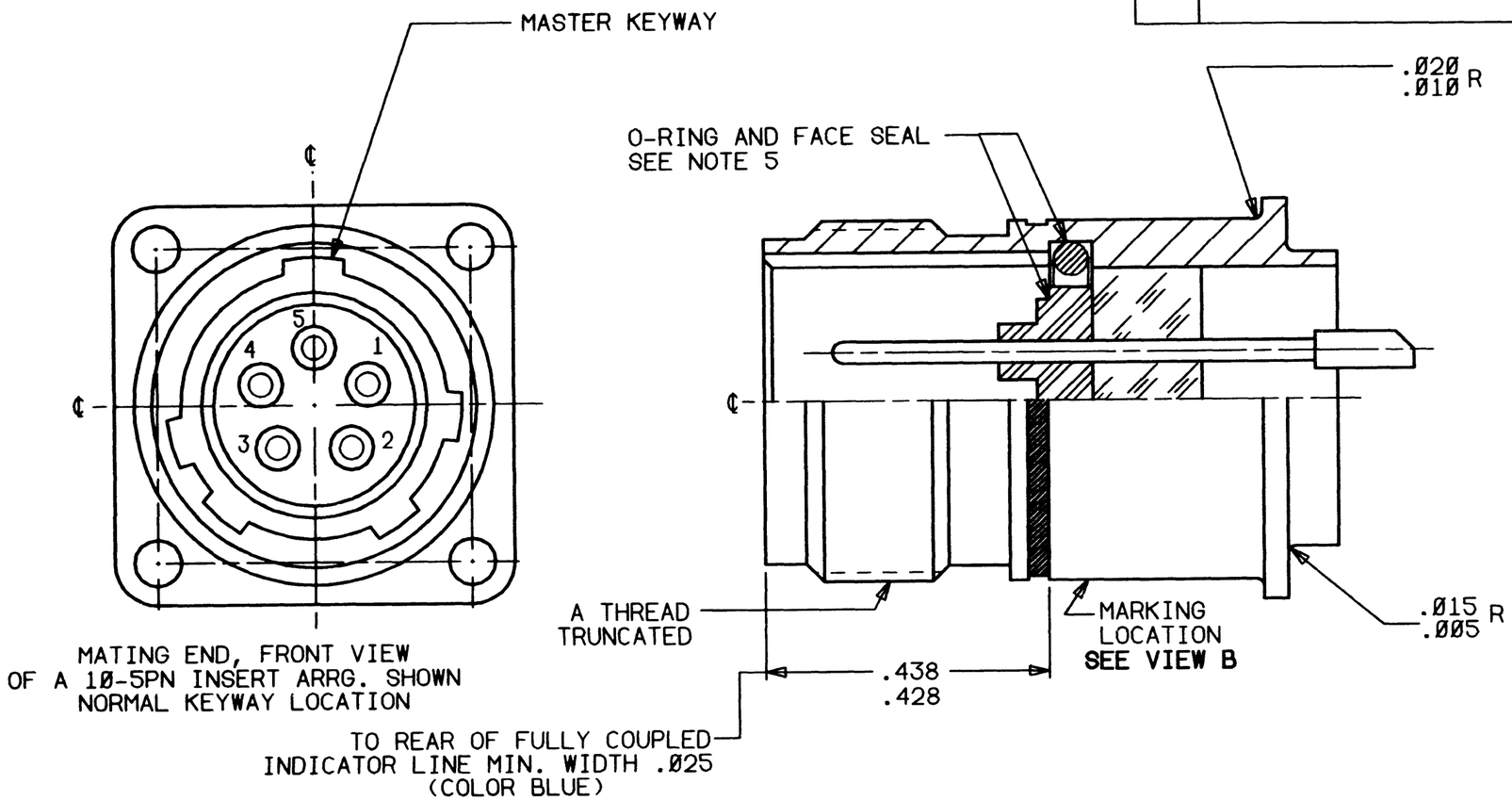

MATING END, FRONT VIEW
OF A 10-5PN INSERT ARRG. SHOWN
NORMAL KEYWAY LOCATION

GEDØØA1Ø-5PN DEUTSCH P/N — DEUTSCH OR SYMBOL — 11139 CAGE CODE — 9319A DATE CODE

SPACE

99207SØCN5Ø88T81PØ1

GE PART NUMBER

VIEW B

	SIGNATURE & DATE
DR	M. HARDY 7/6/94
CHK	B. Erickson 7-29-94
PE	[illegible] 7/29/94
APPD	[illegible] 8-2-94
SCALE NONE	WT

RECEPTACLE, CONNECTOR

THREADED COUPLING
SQ. FLANGE MOUNT
HERMETIC (GLASS INSERT)
NI PLATED SHELL
5ØØ°F

ENVELOPE

CP | MATL CODE

DEUTSCH
ENGINEERED CONNECTING DEVICES
Municipal Airport
Banning, California

B — DWG SIZE | GEDØØA**-**P* | CODE 11139 | SHEET 2 OF 2