ITEM NUMBER	DESCRIPTION
1	CONNECTOR, SMA TYPE NICKEL/BRASS
2	PIN CHUCK, SMAM RG58, GOLD/BRASS
3	CRIMP RING RG58, NICKEL/BRASS
4	HEAT SHRINK, POLYOL, 2:1, BLACK

REVISIONS			
REV	DESCRIPTION	DATE	APPV
B	REDRAWN SOLID MODEL; UPDATED DIMENSIONS AND NOTES, ADDED NEW TITLE BLOCK	2-JUL-12	SAH

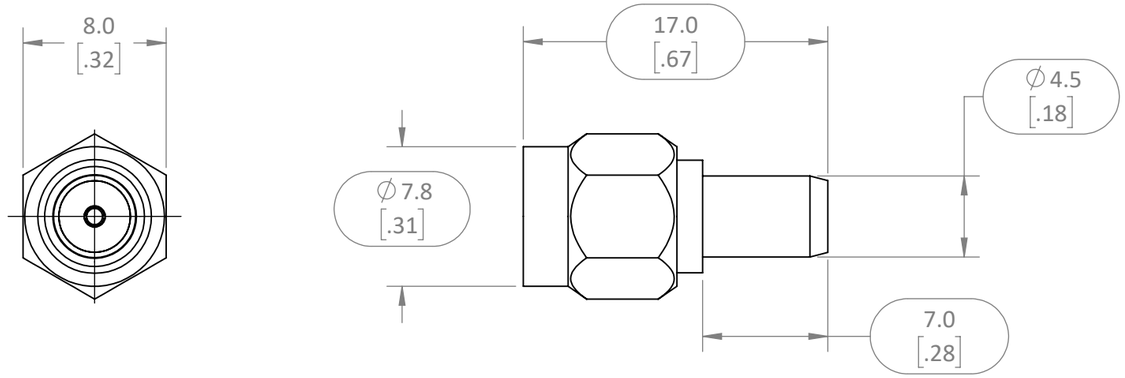

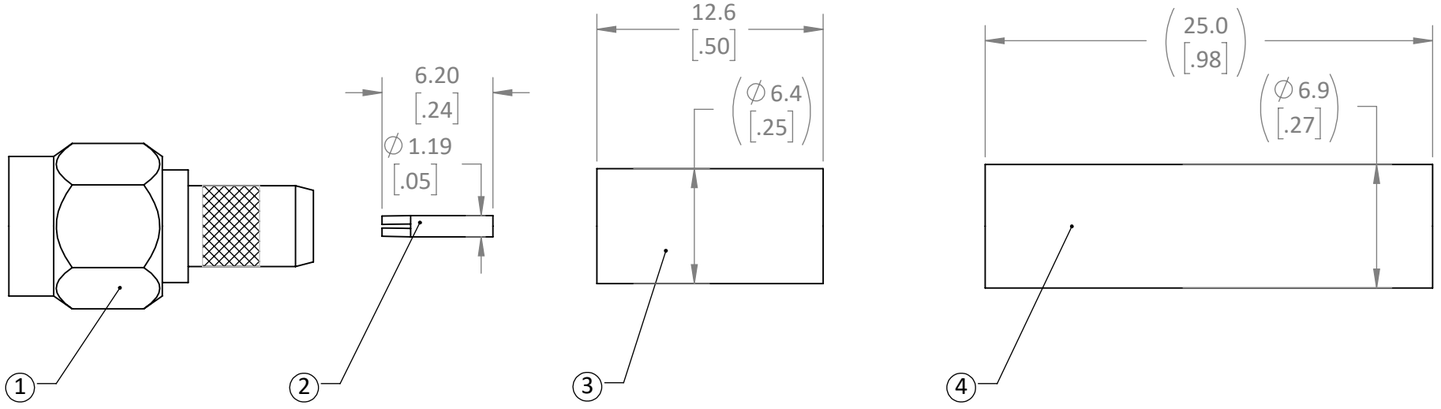

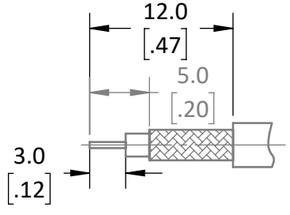

RECOMMENDED CABLE STRIPPING DIMENSIONS

NOTES: (UNLESS OTHERWISE SPECIFIED)
1. ALL DIMENSIONS ARE IN MILLIMETERS [IN].
2. DIMENSIONS APPLY AFTER FINISHING.
3. MANUFACTURE TO BE COMPLIANT WITH EU RoHS DIRECTIVE, USE MATERIALS THAT DO NOT CONTAIN REACH SUBSTANCES OF VERY HIGH CONCERN >1000ppm, AND USE DRC CONFLICT-FREE SOURCED MATERIALS.
4. MECHANICAL PROPERTIES
   1. DURABILTY: 500 CYCLES
   2. RECCOMENDED TORQUE: 0.56 Nm [5.0in lbs]
   3. TEMPERATURE RANGE: -55º - +155ºC
   4. CORROSION (SALT SPRAY): ASTM B-117
5. ELECTRICAL SPECIFICATIONS ARE LISTED FOR REFERENCE ONL SEE LINX DATA SHEET FOR ELECTRICAL PROPERTIES.
   1. IMPEDANCE: 50Ω
   2. INSERTION LOSS: .075x√f(GHz) [CONNECTOR]
6. PRODUCT QUALIFIED IAW LINX TEST PLAN AT CURRENT REVISION.
7. UNLISTED DIMENSIONS ARE CONTROLLED BY SOLID MODEL AT LATEST REVISION.
8. PACKAGE KITS INDIVIDUALLY AND PLACE IN LOT BAGS.
9. LABEL LOT BAGS AND BOXES IAW LINX LABEL DRAWING [MEC-LBL-4x2.5-PAPER-ID]

ASSEMBLY INSTRUCTIONS
1. Strip the cable to the recommended dimensions.
2. Slip heat shrink and crimp ring over stripped cable.
3. Solder the socket to to the center conductor.
4. Insert the socket, center conductor, and insulator into the body until the top of the socket is even with the white insulation in the body.
5. Wrap the braid around the tail of the body and crimp the ring with a 0.213" hex crimp tool (or one that is labeled for use with RG-58 cable).
6. Use heat shrink to cover crimp.

WARNING: THIS DRAWING CONTAINS PROPRIETARY INFORMATION THAT IS THE SOLE PROPERTY OF LINX TECHNOLOGIES, AND SHALL BE TREATED AS SUCH. NO DISCLOSURE OR REPRODUCTION OF THIS DOCUMENT IS PERMITTED, IN WHOLE OR IN PART, WITHOUT THE EXPRESS WRITTEN PERMISSION OF LINX TECHNOLOGIES OR ITS DESIGNATED AGENTS.

MATERIAL:

INTERPRET DIMENSIONS AND TOLERANCES PER ASME Y14.5.

.X ±2.0
.XX ±1.00
.XXX ±.500

ANGLES: ±1°
SURFACE: 32

PROJECTION:

WEIGHT:

FINISH: VAR

DRAWN: AJVM DT: 7/27/2022

ENGR: DT: 10-JUL-08

TE connectivity
159 ORT LANE
MERLIN, OR 97532

TITLE:
SMA MALE CABLE END CRIMP FOR COAX CABLE

SIZE	DWG. NO.	REV
B	C-CONREVSMA007-R58	B

SCALE: 3:1 DO NOT SCALE DRAWING SHEET 1 OF 1

LDCFDFB_B