© 2025 TE Connectivity. All Rights Reserved.

REVISIONS					
P	LTR	DESCRIPTION	DATE	DWN	APVD
	B	ECR-15-018270	07DEC2015	DW	CW
	B1	ECR-18-000057	03JAN2018	YC	CW
	C	ECR-21-111798	22SEP2021	WQR	CW
	D	ECR-25-237961	11JUN2025	ABS	RB

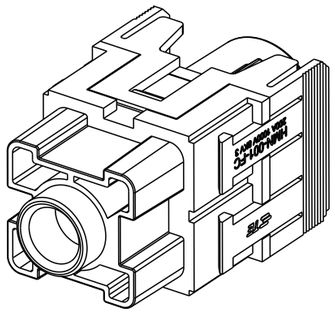

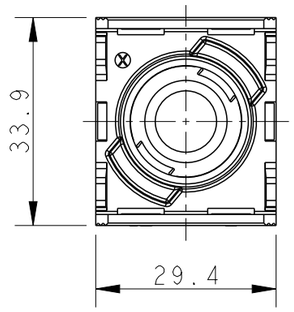

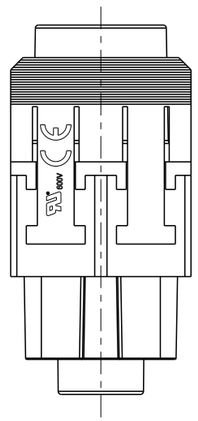

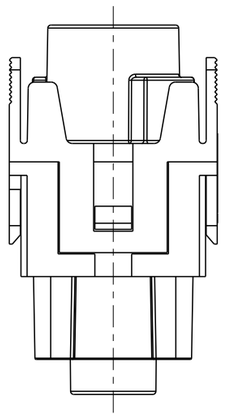

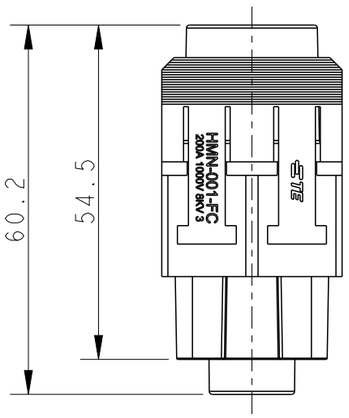

T21110132O1-000 AS SHOWN,
WITH TE LOGO AND UL MARK.
T21110132O1-000 如图示,
带 TE LOGO 和 UL 认证标志.

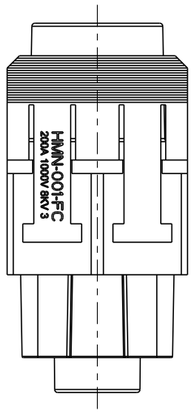

T21110132O1-001 AS SHOWN, ALL DIMENSIONS ARE SAME AS T21110132O1-000, EXCEPT NO TE LOGO, NO UL MARK.
T21110132O1-001 如图示,除了不带 TE LOGO 和 UL 认证标志外,其余所有尺寸同料号 T21110132O1-000 一致.

NOTES:
1. TECHNICAL CHARACTERISTICS:
   INSULATION MATERIAL: PC
   RATED VOLTAGE: 1000V
   RATED CURRENT: 200A
   INSULATION RESISTANCE: >=400MΩ
   RATED IMPULSE VOLTAGE: 8KV
   POLLUTION DEGREE: 3
   CONTACT RESISTANCE: <=0.5mΩ
   FLAMMABILITY: UL94V-0
   MATING CYCLES: 500 CYCLES
   WIRE RANGE: 25mm²~70mm²
   CONTACT TYPE: CRIMP TYPE.

注释:
1. 技术参数:
   绝缘材料: PC
   额定电压: 1000V
   额定电流: 200A
   绝缘电阻: >=400MΩ
   脉冲电压: 8KV
   污染等级: 3
   接触电阻: <=0.5mΩ
   阻燃等级: UL94V-0
   插拔次数: 500次
   接线范围: 20mm²~70mm²
   接线类型: 压接

PART NUMBER 料号	PART DESCRIPTION 描述	
T21110132O1-001	HMN-001-FC	HMN-001 FEMALE MODULE INSERT,CRIMP,NO LOGO HMN-001 冷压模块母插,无LOGO
T21110132O1-000	HMN-001-FC	HMN-001 FEMALE MODULE INSERT,CRIMP HMN-001 冷压模块母插

THIS DRAWING IS A CONTROLLED DOCUMENT.

DIMENSIONS: mm

TOLERANCES UNLESS OTHERWISE SPECIFIED:
0 PLC ±-
1 PLC ±-
2 PLC ±-
3 PLC ±-
4 PLC ±-
ANGLES ±-

MATERIAL -
FINISH -

DWN DAVID WANG 18MAR2015
CHK CHRIS WANG 18MAR2015
APVD XIANG XU 18MAR2015
PRODUCT SPEC 108-137057
APPLICATION SPEC 114-137057
WEIGHT -

TE Connectivity

NAME HMN-001-FC

SIZE	CAGE CODE	DRAWING NO	RESTRICTED TO
A3	00779	C-T21110132O1000	-

CUSTOMER DRAWING | SCALE 1:1 | SHEET 1 OF 1 | REV D