THIS DRAWING IS UNPUBLISHED. RELEASED FOR PUBLICATION 2009
© COPYRIGHT 2009 BY - ALL RIGHTS RESERVED.

REVISIONS

P	LTR	DESCRIPTION	DATE	DWN	APVD
	B1	REVISED PER ECO-17-009774	06SEP2017	M.G.	M.G.
	B2	REVISED PER ECO-20-002019	12FEB2020	AP	VN
	B3	REVISED PER ECN-21-125377	08NOV2021	VN	VN

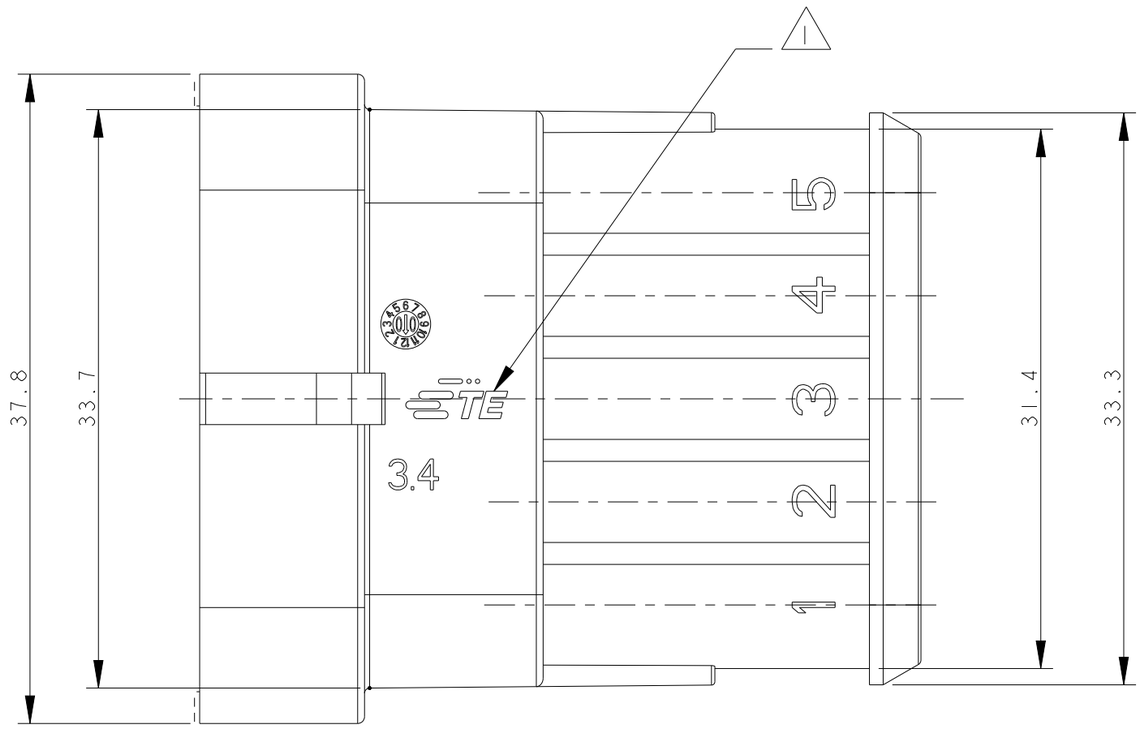

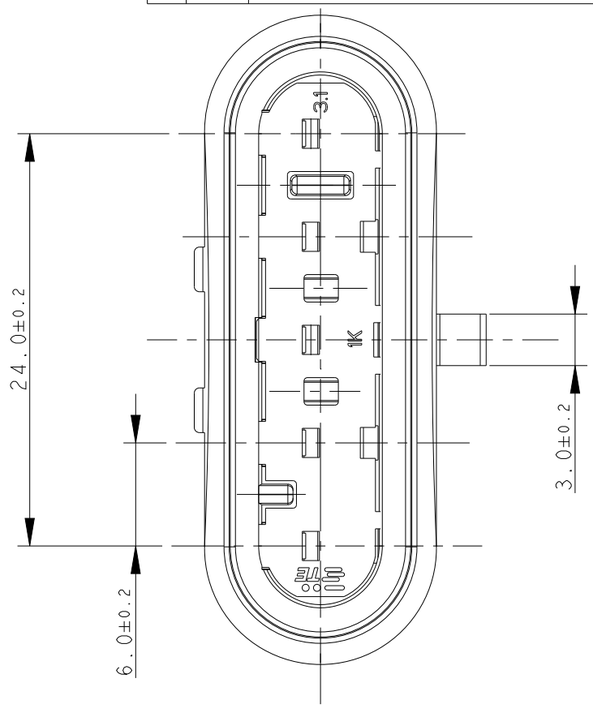

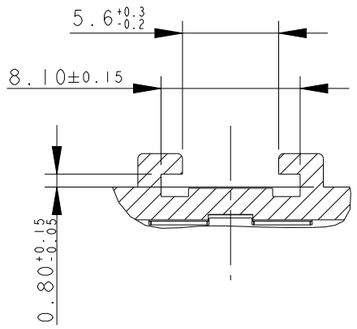

PART.SECTION B-B

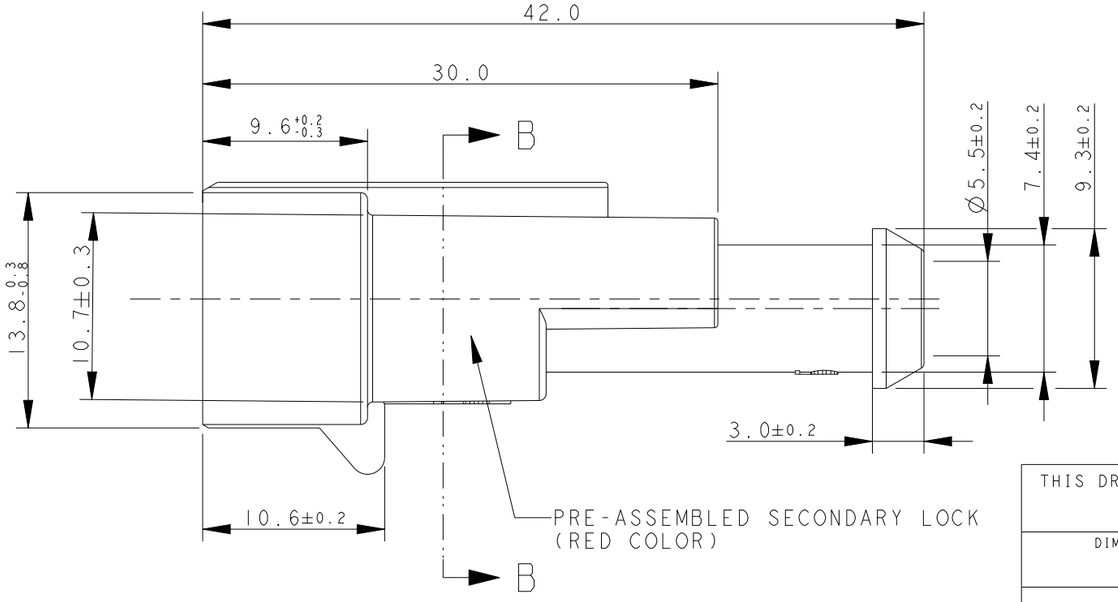

BROWN	PA66-GF	B	4-282107-1
GRAY	PA66-GF	B	282107-2
BLACK	PA66-GF	B	282107-1
FINISH/COLOR	MATERIAL	REV	PART NUMBER

1 TE CONNECTIVITY TRADE MARK,
(IN ALTERNATIVE: "AMP" LOGO, OR "Tyco Electronics" LOGO)

THIS DRAWING IS A CONTROLLED DOCUMENT.

DIMENSIONS: mm

TOLERANCES UNLESS OTHERWISE SPECIFIED:
0 PLC ±-
1 PLC ± 0.3
2 PLC ±-
3 PLC ±-
4 PLC ±-
ANGLES ± 2°

MATERIAL - SEE TABLE

FINISH - SEE TABLE

DWN C. BERTINI 02-1990
CHK A.BRUNI 02-1990
APVD - -
PRODUCT SPEC 108-20090
APPLICATION SPEC 412-20000
WEIGHT 7.72g

TE Connectivity

NAME AMP SUPERSEAL 1.5 SRS. 5 POSITIONS TAB ASS'Y -

SIZE A3 | CAGE CODE 00779 | DRAWING NO C-282107 | RESTRICTED TO

CUSTOMER DRAWING | SCALE 14:5 | SHEET 1 OF 2 | REV B3

THIS DRAWING IS UNPUBLISHED. RELEASED FOR PUBLICATION 2009
© COPYRIGHT 2009 BY - ALL RIGHTS RESERVED.

REVISIONS

P	LTR	DESCRIPTION	DATE	DWN	APVD
	-	SEE SHEET 1	-	-	-

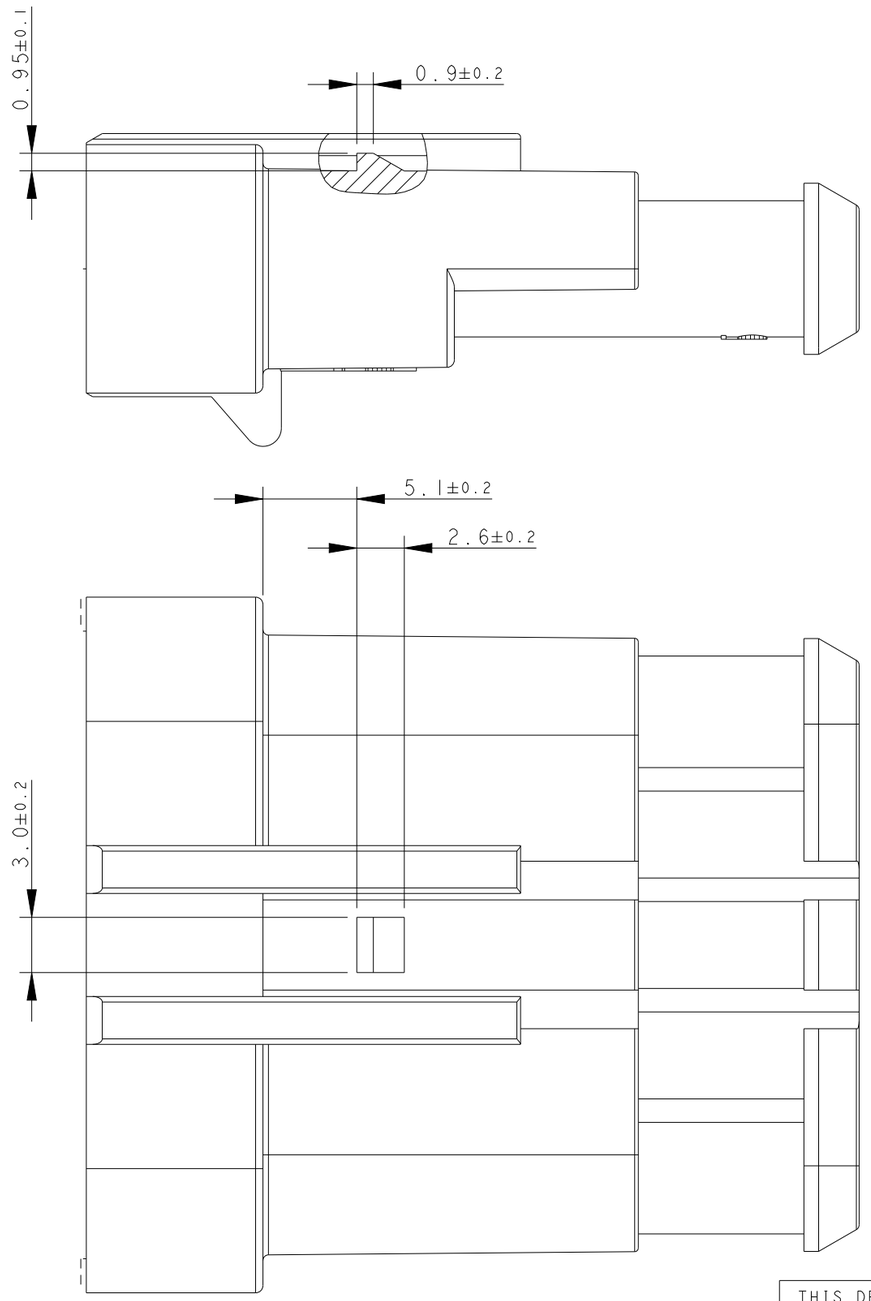

REFER SHEET 1 FOR MISSING DIMENSIONS

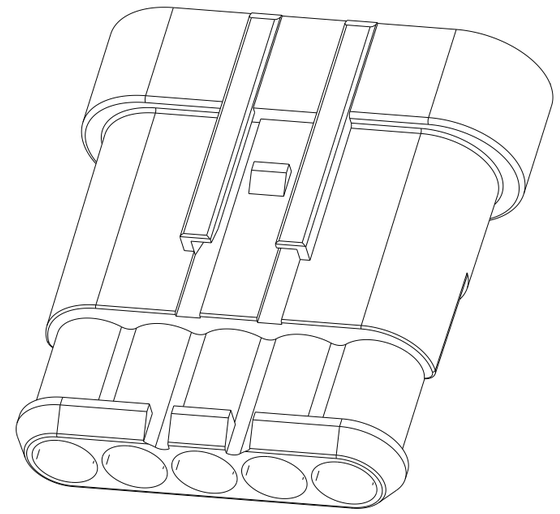

4-282107-1 AS SHOWN

THIS DRAWING IS A CONTROLLED DOCUMENT.

DIMENSIONS: mm

TOLERANCES UNLESS OTHERWISE SPECIFIED:
0 PLC ±-
1 PLC ± 0.3
2 PLC ±-
3 PLC ±-
4 PLC ±-
ANGLES ± 2°

MATERIAL - SEE TABLE

FINISH - SEE TABLE

DWN C. BERTINI 02-1990
CHK A.BRUNI 02-1990
APVD - -
PRODUCT SPEC 108-20090
APPLICATION SPEC 412-20000
WEIGHT 7.72g

TE Connectivity

NAME
AMP SUPERSEAL 1.5 SRS.
5 POSITIONS TAB ASS'Y
-

SIZE	CAGE CODE	DRAWING NO	RESTRICTED TO
A3	00779	C-282107	

CUSTOMER DRAWING | SCALE 14:5 | SHEET 2 OF 2 | REV B3