S	DM5601-*-*P

REVISIONS			
SYM	DESCRIPTION	DATE	APPROVAL
S	REDRAWN EO 35891	12-31-64	P.S.

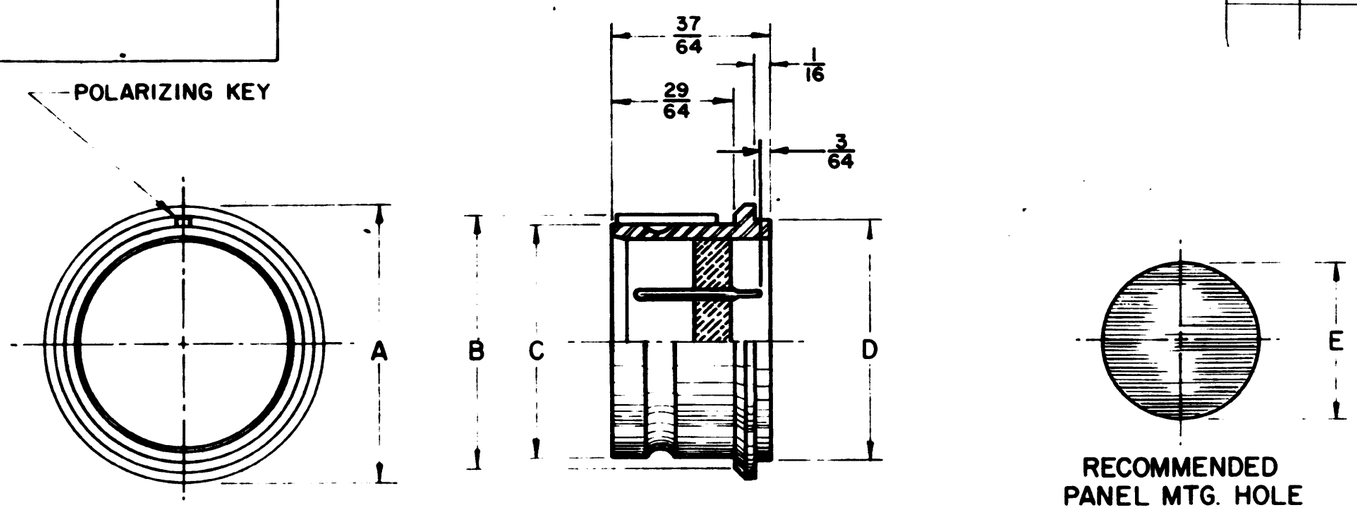

SHELL SIZE	PART NUMBER	A DIA	B DIA	C DIA	D DIA +.000 -.004	E DIA +.010 -.000	WEIGHT IN LBS
3	DM5601 - 3-*P	19/32	17/32	7/16	.500	.510	
7	DM5601 - 7-*P	3/4	11/16	37/64	.625	.635	
12	DM5601 - 12-*P	7/8	13/16	45/64	.749	.759	
19	DM5601 - 19-*P	1	15/16	27/32	.875	.885	
27	DM5601 - 27-*P	1 3/16	1 1/8	1	1.062	1.072	
37	DM5601 - 37-*P	1 9/32	1 7/32	1 1/8	1.156	1.166	
61	DM5601 - 61-*P	1 9/16	1 1/2	1 13/32	1.438	1.448	

NOTES:
1. INSERTS ARE CONTINUOUS DIELECTRIC
2. CONTACT IDENT IS IN CONTRASTING COLOR TO INSERT
3. FINISH - SHELL & CONTACTS - TIN OVER CAD
4. HAS #20 EYELET CONTACTS ONLY.

QTY	PART NUMBER	DESCRIPTION

LIST OF MATERIAL

TOLERANCES UNLESS OTHERWISE SPECIFIED
RADIUS .015 DECIMALS .005
ANGLES ± 30'
TIR .010
PARTS TO BE FREE OF BURRS AND SHARP EDGES

MATERIAL

FINISH

	SIGNATURE & DATE
DR	L. Guyers 12-31-64
CHK	L. Mahan 12/31/64
PE	Lance Luedtke

ENVELOPE
RECEPTACLE CONNECTOR
ELECTRICAL HERMETIC
MINIATURE
QUICK - DISCONNECT
SOLDER MOUNT TYPE

NONE

The Deutsch Company
ELECTRONIC COMPONENTS DIVISION
Municipal Airport • Banning California

B DM5601-*-*P

SHEET 1 OF 1