REVISIONS			
REV	DESCRIPTION	DATE	APPROVED
01_0	RELEASED	2/22/89	

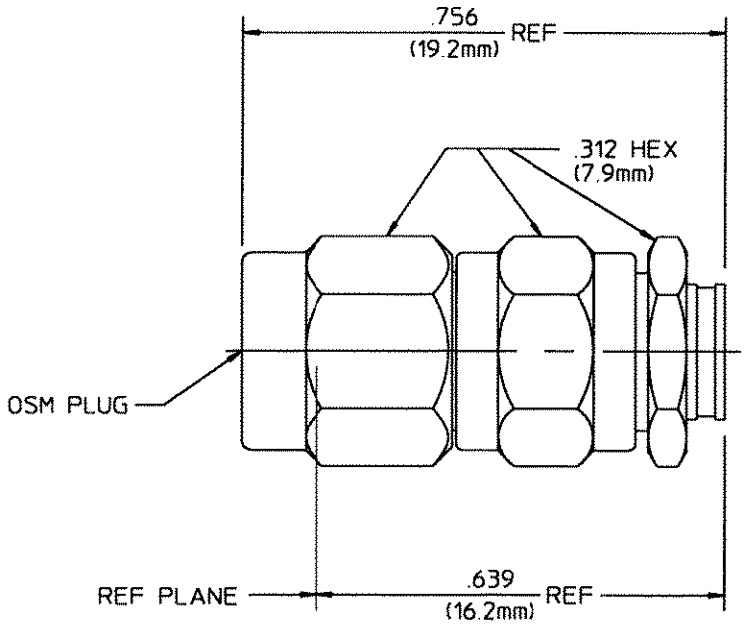

COMPONENT	MATERIAL	FINISH
HOUSING COUPLING NUT CLAMP NUT	STAINLESS STEEL PER ASTM-A484 AND ASTM-A582, TYPE 303	PASSIVATE PER QQ-P-35
DIELECTRIC	TFE FLUOROCARBON PER MIL-P-19468 AND FED SPEC L-P-403	N/A
CENTER CONTACT	BERYLLIUM COPPER PER QQ-C-530, ALLOY 173	GOLD PLATE PER MIL-G-45204 OVER COPPER PLATE PER MIL-C-14550
SLEEVE	BRASS PER QQ-B-626, COMP. 360	GOLD PLATE PER MIL-G-45204 OVER COPPER PLATE PER MIL-C-1 550
GASKET	SILICONE RUBBER PER ZZ-R-765	N/A
RETAINING RING	BERYLLIUM COPPER PER QQ-C-533	N/A

NOTES:
1. DESIGNED FOR USE WITH .141 SEMI-RIGID CABLE
2. CAPTURED CENTER CONTACT

CABLE ENTRY DIAMETER MINIMUM	
SLEEVE	.145
CONTACT	.041

UNLESS OTHERWISE SPECIFIED DIMENSIONS ARE IN INCHES
TOLERANCE ON
FRAC. ±1/64 DEC. ±.005 ANGLES ±1°

These drawings and specifications are the property of Omni Spectra incorporated and shall not be reproduced or copied or used in whole or in part as the basis for the manufacture or sale of item(s) without written permission.

DRAWN BY E.F.HOYLE 1/24/89
CHECKED BY L.ROSS 2/10/89
APPD BY 2/22/89

USE ASS'Y PROCEDURE

NO. A.P. 20-546

Omni Spectra, Inc.
Microwave Connector Division

TITLE SMA STRAIGHT CABLE PLUG SOLDER CLAMP ATTACHMENT M39012/79-3108 CAT E.

SIZE	CODE IDENT NO.		REV
B	26805	2001-8108-92	01_0

SCALE 5:1 SHEET 1 OF 1

CUSTOMER

1050790
SHEET 1 OF 1
REV 0