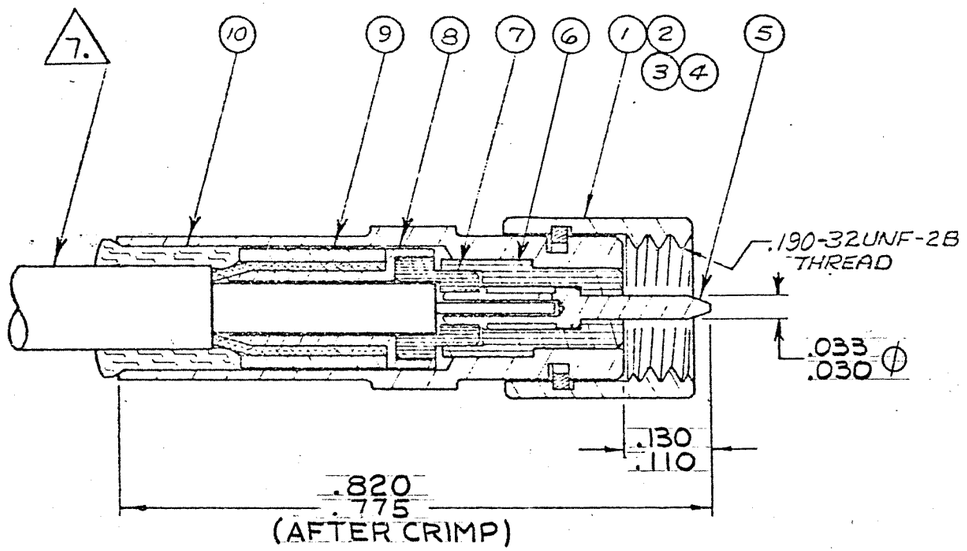

						DELETED		11
	1	1	1	1	003-0861-0001	SEALING SLEEVE	SILICONE RUBBER MIL-R-5847	10
4	1	1	1	1	003-0938-0002	MIDDLE SLEEVE	LEADED COPPER	9
4	1	1	1	1	003-0939-0002	INNER SLEEVE	BRASS, QQ-B-626	8
	1	1	1	1	003-0937-0001	CABLE INSULATOR	TEFLON PER L-P-403	7
	1	1	1	1	003-1301-0001	BODY INSULATOR	TEFLON PER L-P-403	6
4	1	1	1	1	003-0807-0002	PIN CONTACT	COPPER ALLOY	5
5 4	1				003-1295-0004	HOUSING SUB-ASSY NUT-1/4" HEX W/WIRE HOLES		4
4		1			003-1295-0003	HOUSING SUB-ASSY NUT-1/4" HEX		3
4			1		003-1295-0002	HOUSING SUB-ASSY NUT-1/4" KNURL		2
4				1	003-1295-0001	HOUSING SUB-ASSY NUT-1/4" PARTIAL HEX		1
	4	3	2	1	COMPONENT No.	NOMENCLATURE	MAT'L & SPEC.	ITEM
	DASH NO. *							

7. CABLE ACCOMMODATION DIMS:
   JACKET DIA. - - - - - - - .110 MAX
   DIELECTRIC DIA. - - - - - - .057-.070
   INNER CONDUCTOR DIA. - .009-.019
   FOR USE WITH EXTRUDED OR WRAPPED JACKET

6. FOR ELECTRICAL & MECHANICAL SPECS. SEE MALCO CATALOG.

5. .016 DIA. WIRE HOLE 3 PLACES

4. GOLD PLATE PER MIL-G-45204 TYPE II, GRADE C, CLASS 1.

3. DELETED

2. SEE RF-ASMB-8 ASSY INSTRUCTIONS. SPECIAL TOOL REQUIRED: CONTACT CRIMP: 010-0134-0000 & LOCATOR 001-0104-0000. ALTERNATE TOOL 010-0065-0000 (NO LOCATOR REQUIRED) HOUSING CRIMP: 010-0082-0000.

1. THIS CONNECTOR MATES WITH ALL 50 Ω GOLDEN CRIMP, CRIMP SILVER & ALL S-50 JACKS & RECEPTACLES AS LISTED IN MALCO CATALOG.

NOTES: UNLESS OTHERWISE SPECIFIED

LET	ECO	REVISION DESCRIPTION	BY/CK	DATE	APP
K	23178	REVISED & REDRAWN 3-3-78		3-14-78	
L	24192	NOTE 2 WAS: .... ASSY TOOL REQ'D 010-0065-0000 OR 010-0134-0000 FOR CONTACT, 010-0082-0000 FOR HOUSING. NOTE 7 WAS: .... CENTER CONDUCTOR 5-1-79		5/14/79	
M	38493	UPDATE REV. LETTER	TL	1/22	

ASSEMBLY | NO REQ'D
NEXT ASSEMBLIES

STANDARD TOLERANCES UNLESS OTHERWISE SPECIFIED
DEC. ±
FRAC. ±
ANGLES ±
ECCENTRICITY MAX. T.I.R.
HOLE DIA. ±
SURFACE ROUGHNESS ✓ MICRO INCHES
THREADS TO MIL-S-7742
COMMERCIAL TOLERANCES APPLY TO STOCK DIMENSIONS

MALCO
A MICRODOT COMPANY, INC.
220 PASADENA AVE., SO. PASADENA, CALIF.

SURFACE TREATMENT: NOTED
MATERIAL: NOTED
APP
APP
CHECKED BY C.H
DRAWN BY D.D.

PLUG ASSEMBLY
NON-ENVIRONMENTAL
GOLDEN CRIMP 50Ω (RG-188)

PROD CODE 941
CODE CDM
SCALE ∞ | WT | DATE 3-3-78
DRAWING NUMBER 132-0114-000* | M

DIETERICH-POST CLEARPRINT 1000H-10

TYCO CUSTOMER DWG 7-1532149-8