THIS DRAWING IS UNPUBLISHED. RELEASED FOR PUBLICATION 2017
© COPYRIGHT 2017 BY -TE CONNECTIVITY ALL RIGHTS RESERVED.

REVISIONS					
P	LTR	DESCRIPTION	DATE	DWN	APVD
	C	REVISED PER PCN E-17-013177	13JUN2017	SS	DM
	C1	REVISED PER PCN-25-244386	14MAY2025	JT	EC

4 SEAL TYPE	CONTACT SIZE	MIN. INSUL. OD [mm]	MAX. INSUL. OD [mm]	WIRE RANGE [mm^2] REF ONLY
NORMAL	16	.100 [2.540]	.134 [3.404]	14-18 AWG [2.0-.75]
E	16	.053 [1.346]	.120 [3.048]	14-20 AWG [2.0-0.50]

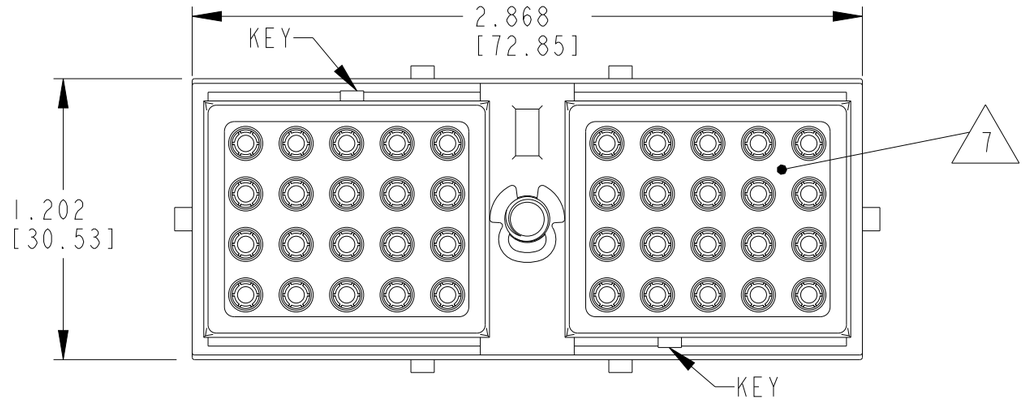

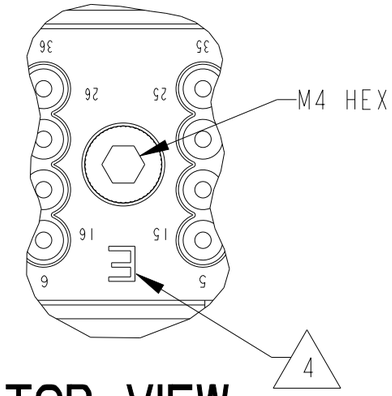

TOP VIEW

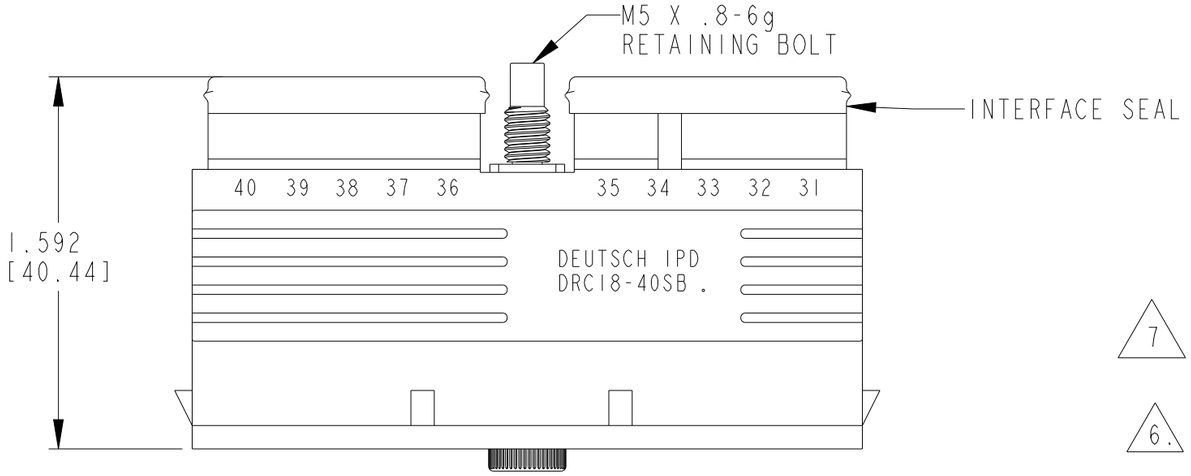

7 WEB SEAL HOLES MAY NOT BE COMPLETELY ALIGNED TO THE HOLES OF CONNECTOR BODY.

TE INTERNAL PN	DEUTSCH PN
DRC18-40SB	DRC18-40SB
DRC18-40SBE	DRC18-40SBE

6. MATERIAL: PLUG: PPS GF40(BLACK)
SEAL/GROMMET: VMQ(RED-ORANGE)
CLIP: STEEL, UNPLATED
BOLD: STAINLESS STEEL WITH SILVER PLATING AN MAY TARNISH.

5. MATING TORQUE REQUIREMENT: 25-28 IN-LB [2.82-3.16 Nm].

4. WHEN X = E: MARK LETTER "E" STAMPING IDENTIFIES "E" SEAL.
WHEN X = BLANK: IDENTIFIES "NORMAL" WIRE SEAL (NOT SHOWN).

3. THIS PLUG MATES WITH DRC12-40PBX-XXXX;DRC13-40PB-XXXX;
DRC14-40PBX-XXXX (XXXX=ALL MODIFICATIONS).
CONSULT FACTORY FOR MODS.

2. FOR CONTACTS AND WIRE PERFORMANCE AND APPLICATION
CHARACTERISTICS, SEE ENVELOPE DRAWING 0425-015-0000.

1. PLUG IS SUPPLIED WITH DUST CAP, 0515-001-4005 (NOT SHOWN).

NOTES:

THIS DRAWING IS A CONTROLLED DOCUMENT.

DIMENSIONS: INCHES [mm]

TOLERANCES UNLESS OTHERWISE SPECIFIED:
0 PLC ±
1 PLC ±
2 PLC ±
3 PLC ±.025 [.635]
4 PLC ±
ANGLES ±0°30'0"

MATERIAL 6

FINISH - -

DWN J.APOSTOL 13JUL2000
CHK D.MEYER 21JUL2000
APVD R.REED 21JUL2000
PRODUCT SPEC -
APPLICATION SPEC -
WEIGHT -

TE Connectivity

NAME PLUG KEY ARRANGEMENT -B-
SERVICEABLE CONTACTS
DRC 40 SERIES

SIZE	CAGE CODE	DRAWING NO	RESTRICTED TO
A3	4AFU8	C-DRC18-40SBX	-

CUSTOMER DRAWING | SCALE 1.5:1 | SHEET 1 OF 1 | REV C1

1470-19 (3/13)