REV	
B	DT15-12P*-B028

REVISIONS			
SYM	DESCRIPTION	DATE	APPROVED
NC	NEW RELEASE PER E.O. P18982	5/17/06	RDR
A	REVISION PER E.O. P19381	10/10/06	RDR
B	REVISION PER E.O. P21100	8-29-11	RDR

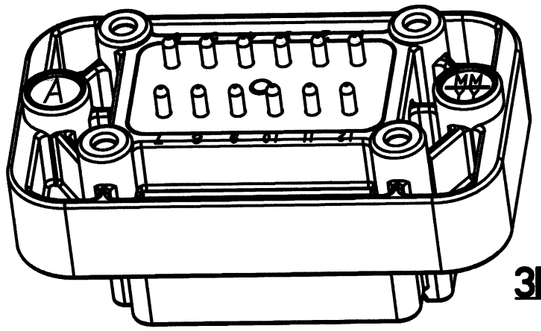

3D VIEW

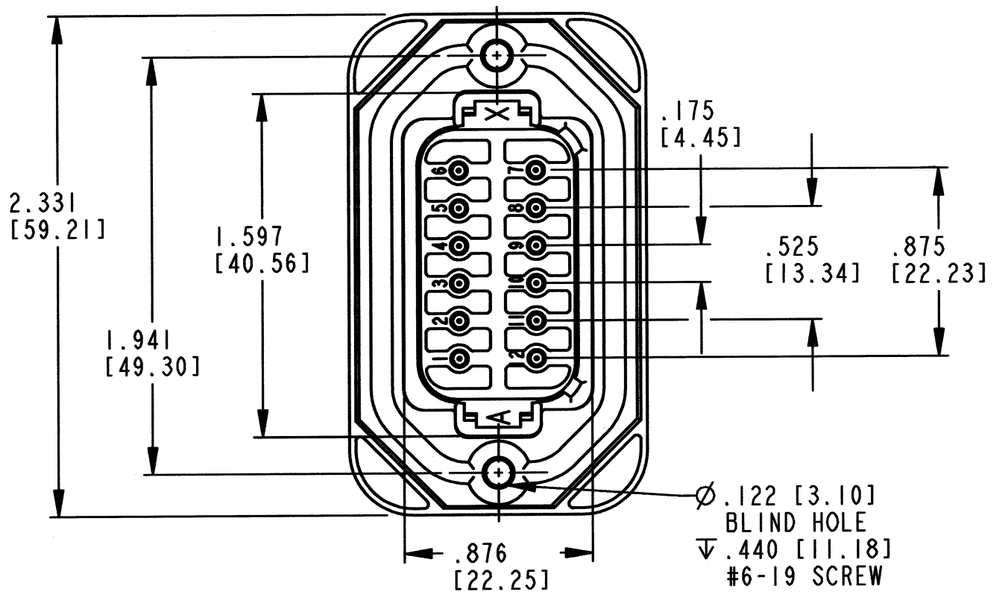

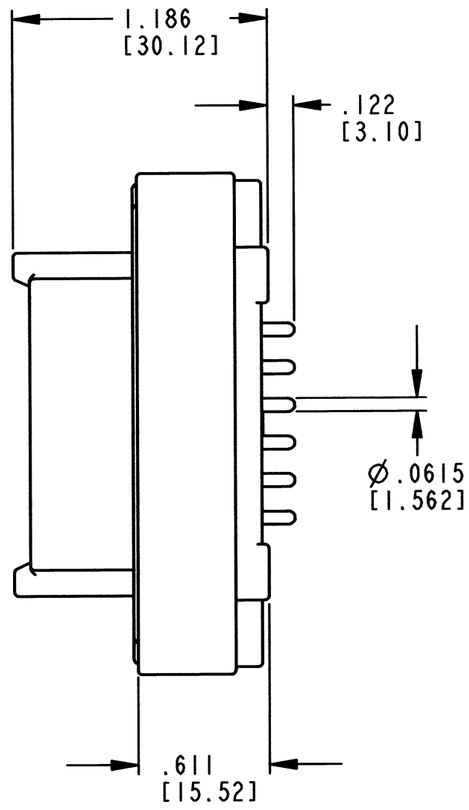

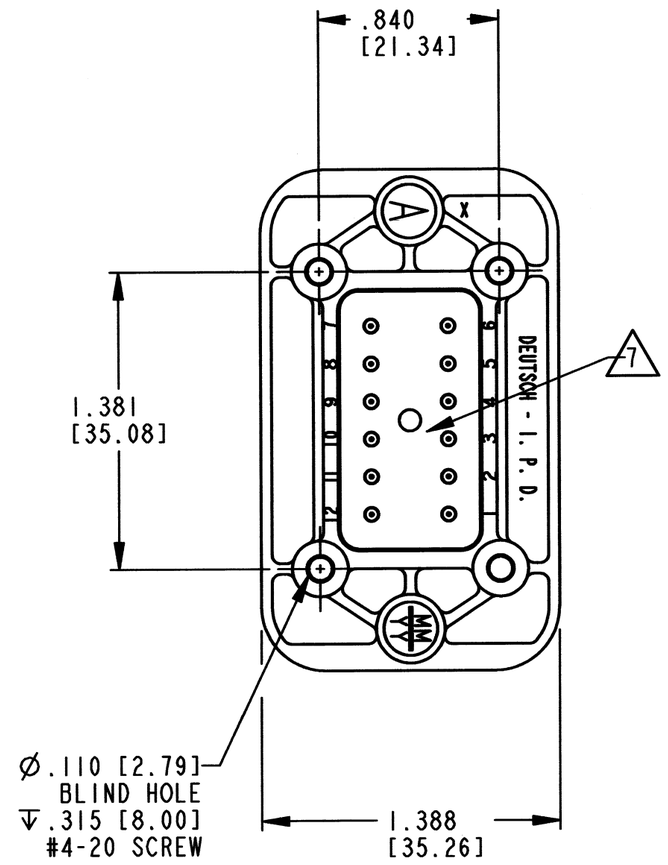

7. THIS CONNECTOR WILL WITHSTAND 5 P.S.I. APPLICATIONS.

6. RECOMMENDED TORQUE VALUES ARE AS FOLLOWS: #6-19 SCREWS: 10-20 IN LB. [1.13-2.26 N-m] #4-20 SCREWS: 6-10 IN LB. [0.68-1.13 N-m]

5. MOUNTING HOLES WILL ACCEPT CAMCAR PLASTITE SELF THREAD SCREWS (NOT INCLUDED). EXAMPLE: #6-19, #4-20.

4. SHELL MATERIAL: PLASTIC; FLANGE SEAL MATERIAL: RUBBER.

3. THIS RECEPTACLE MATES WITH DT06-12S* PLUG -****- ALL MODIFICATIONS.

2. DIMENSION TOLERANCE: ±.025 [.64], (PIN SPACING ±.005 [.127], CONTACT DIAMETER ±.002 [.051], PANEL CUTOUT ±.010 [.25]).

NOTES: 1. DIMENSIONS ARE IN INCHES [mm].

	SIGNATURE & DATE
DR	A. MALAGON 12/09/05
CHK	8/29/2011
PE	8/29/11
APPD	
SCALE	NONE WT

RECEPTACLE FOR PC BOARD -B028 MOD DT SERIES

ENVELOPE

EP | MATL. CODE

DEUTSCH INDUSTRIAL
3850 INDUSTRIAL AVE.
HEMET, CA 92545

B | DT15-12P*-B028

DWG SIZE | CODE 11139 | SHEET 1 OF 2

REV	
B	DT15-12P✳-B028

REVISIONS			
SYM	DESCRIPTION	DATE	APPROVED
B		8-29-11	RDA
	SEE SHEET ONE		

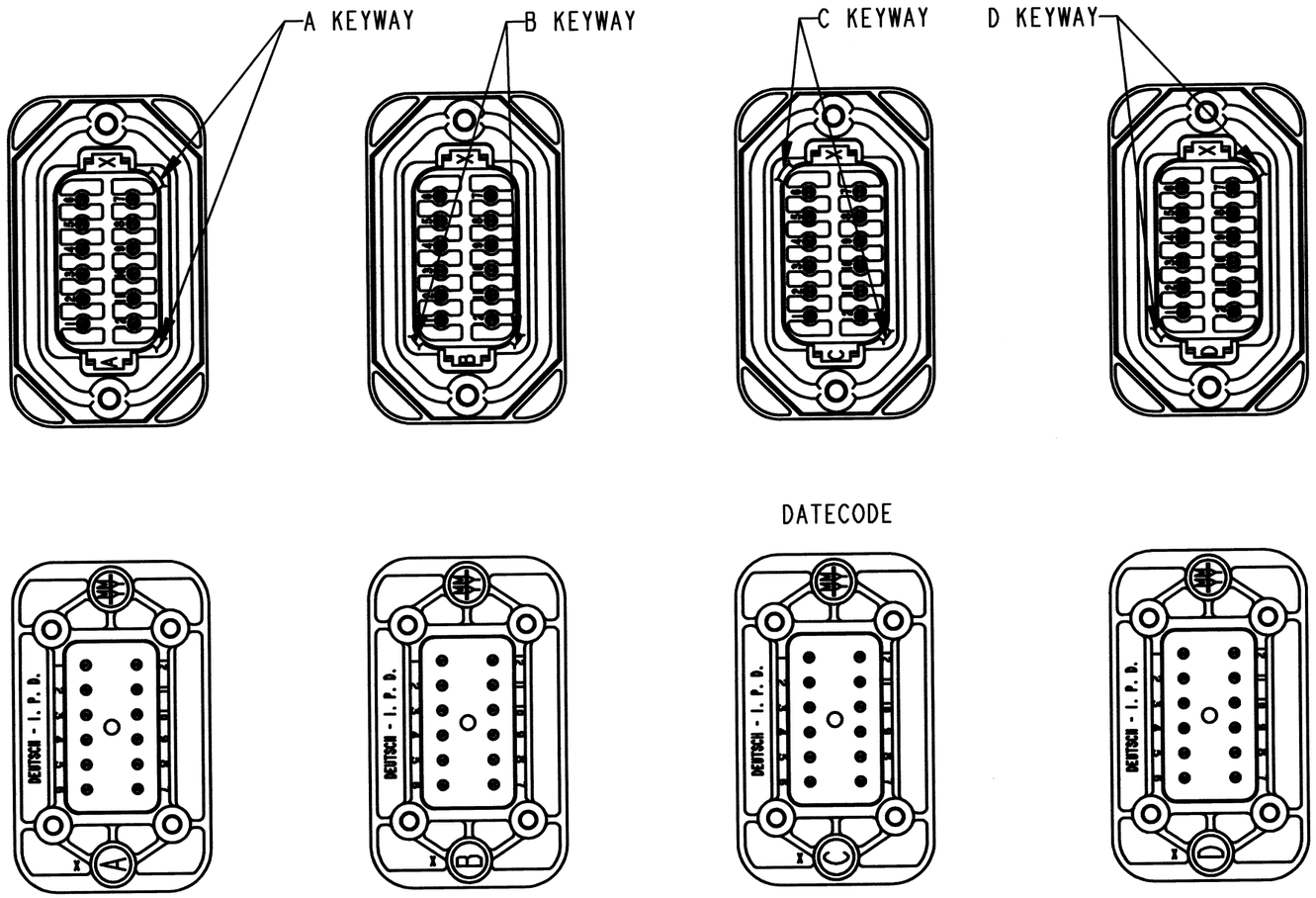

DT15-12PA-B028
COLOR GREY

DT15-12PB-B028
COLOR BLACK

DT15-12PC-B028
COLOR GREEN

DT15-12PD-B028
COLOR BROWN

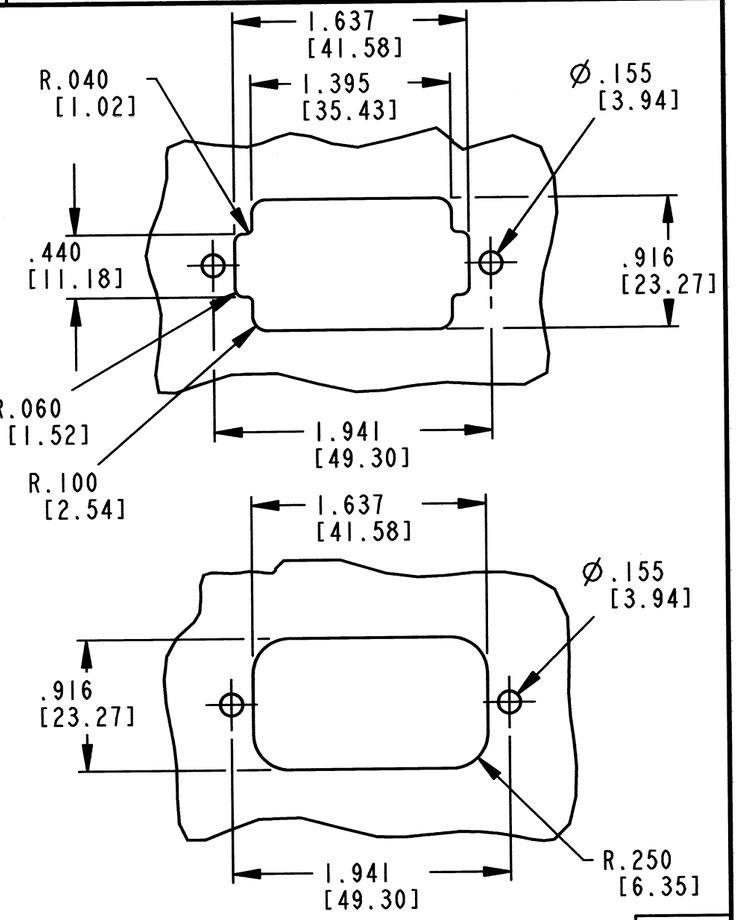

RECOMMENDED PANEL CUTOUTS

	SIGNATURE & DATE
DR	A. MALAGON 7/21/05
CHK	B. Byford 8/29/2011
PE	[illegible] 8/29/11
APPD	S. Beard 8/29/11
SCALE	NONE
WT	

RECEPTACLE FOR
PC BOARD
-B028 MOD
DT SERIES

ENVELOPE

EP

MATL. CODE

DEUTSCH INDUSTRIAL
3850 INDUSTRIAL AVE.
HEMET, CA 92545

B DT15-12P✳-B028

DWG SIZE

CODE 11139

SHEET 2 OF 2

NOTES: