© 2025 TE Connectivity. All Rights Reserved.

REVISIONS					
P	LTR	DESCRIPTION	DATE	DWN	APVD
	A1	REVISED AS PER ECR-25-235573	04AUG2025	PK	VNB

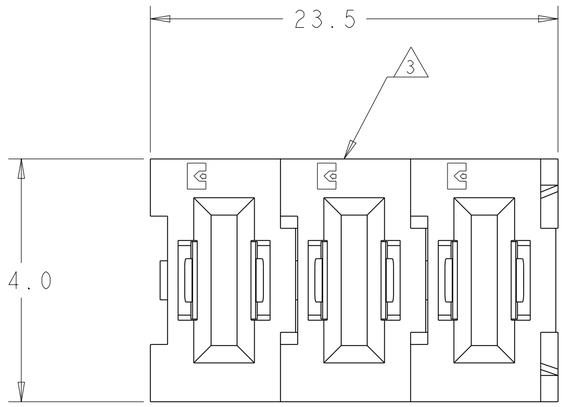

1 MATERIAL:
INSULATORS - THERMOPLASTIC, GLASS REINFORCED, COLOR: BLACK
UL 94V-0 FLAMMABILITY RATED.
POWER CONTACTS - COPPER ALLOY,

2 FINISH:
CONTACTS - PLATE 0.76µm MIN. THK., OVER NICKEL 1.27µm MIN. THK
SOLDER TAILS - PLATE 3.05µm MIN. THK. OVER NICKEL 1.27µm MIN. THK

3 ITEMS COVERED TO THIS SPECIFICATION TO BE PERMANENTLY IDENTIFIED WITH THE FOLLOWING IDENTIFIER LABEL

YEAR ┐ ┌ WEEK

TYCO ELECTRONICS P/N — XXXXXXX-X

DATE CODE (e.g. 0106) — XXXX

OBSOLETE

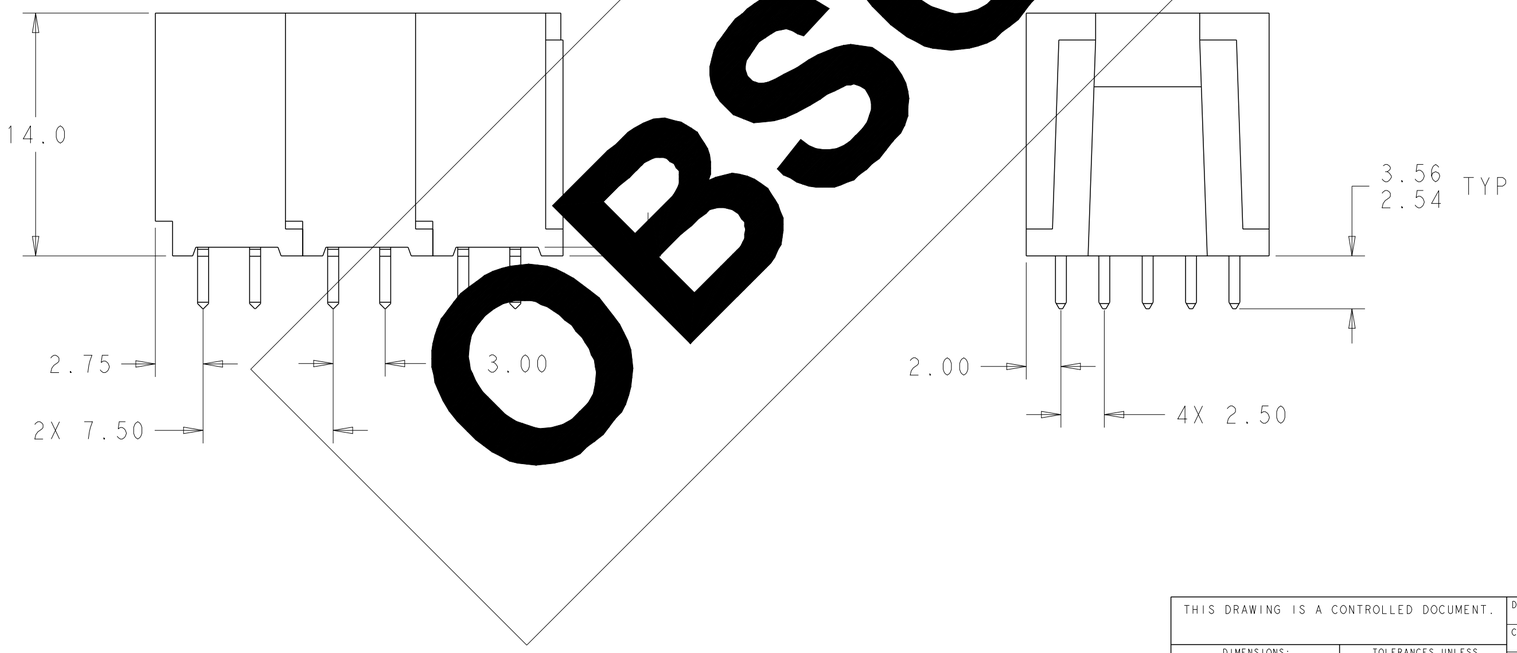

2085462-1

PART NO.

THIS DRAWING IS A CONTROLLED DOCUMENT.		DWN R.GRZYBOWSKI 18MAY2010	TE Connectivity
		CHK M.SYKES 18MAY2010	
DIMENSIONS: mm	TOLERANCES UNLESS OTHERWISE SPECIFIED: 0 PLC ±- ; 1 PLC ±0.5 ; 2 PLC ±0.25 ; 3 PLC ±- ; 4 PLC ±- ; ANGLES ±-	APVD M.PERCHERKE 18MAY2010	NAME SOCKET CONNECTOR ASSEMBLY STRAIGHT, SOLDER TAIL FLATPAQ
		PRODUCT SPEC -	
		APPLICATION SPEC -	SIZE A2 · CAGE CODE 00779 · DRAWING NO C-2085462 · RESTRICTED TO -
MATERIAL 1 material_2	FINISH 2 finish_spec_2	WEIGHT -	CUSTOMER DRAWING · SCALE 3:1 · SHEET 1 OF 3 · REV A1

© 2025 TE Connectivity. All Rights Reserved.

REVISIONS					
P	LTR	DESCRIPTION	DATE	DWN	APVD
	-	SEE SHEET 1	-	-	-

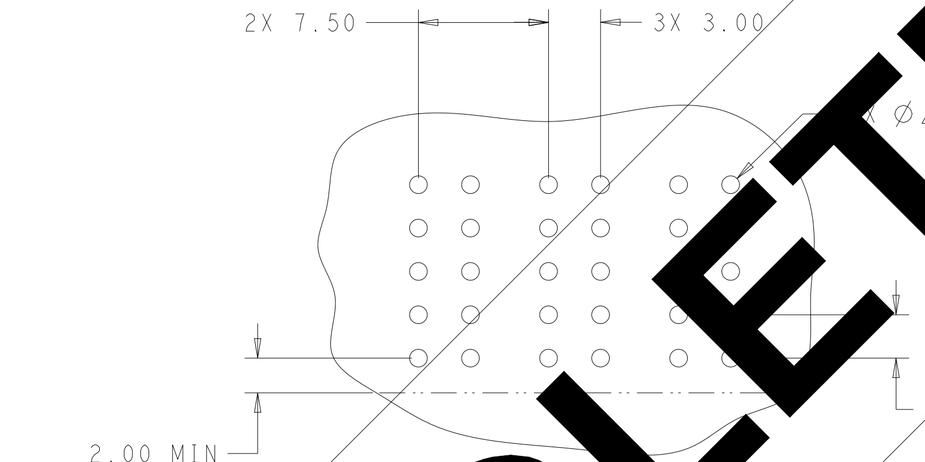

PRINTED CIRCUIT BOARD LAYOUT
COMPONENT SIDE

OBSOLETE

CONNECTOR	CATALOG MODULE #	QTY	SIZE NO.	CONTACT QTY	MATING PIN	MAX. CURRENT (PER CONTACT)	CONTACT SPACING	VOLTAGE RATING
SOCKET	FP100	3	8	3	1.25 X 7.00	35 amps	7.50	250

THIS DRAWING IS A CONTROLLED DOCUMENT.

DIMENSIONS: mm

TOLERANCES UNLESS OTHERWISE SPECIFIED:
0 PLC ±-
1 PLC ±0.5
2 PLC ±0.25
3 PLC ±-
4 PLC ±-
ANGLES ±-

MATERIAL - material_2

FINISH - finish_spec_2

DWN R.GRZYBOWSKI 18MAY2010
CHK M.SYKES 18MAY2010
APVD M.PERCHERKE 18MAY2010
PRODUCT SPEC -
APPLICATION SPEC -
WEIGHT -

CUSTOMER DRAWING

Tyco Electronics TE — TE Connectivity

NAME SOCKET CONNECTOR ASSEMBLY STRAIGHT, SOLDER TAIL FLATPAQ

SIZE	CAGE CODE	DRAWING NO	RESTRICTED TO
A2	00779	C-2085462	-

SCALE 4:1 SHEET 2 OF 3 REV A1

© 2025 TE Connectivity. All Rights Reserved.

REVISIONS					
P	LTR	DESCRIPTION	DATE	DWN	APVD
	-	SEE SHEET 1	-	-	-

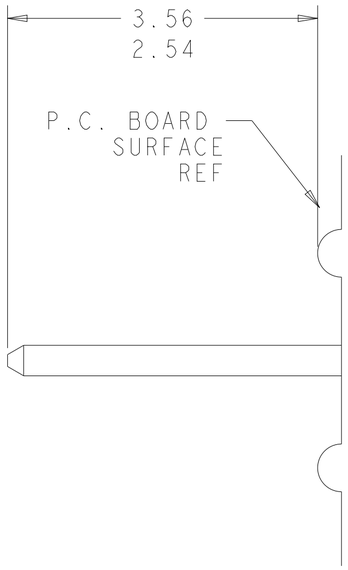

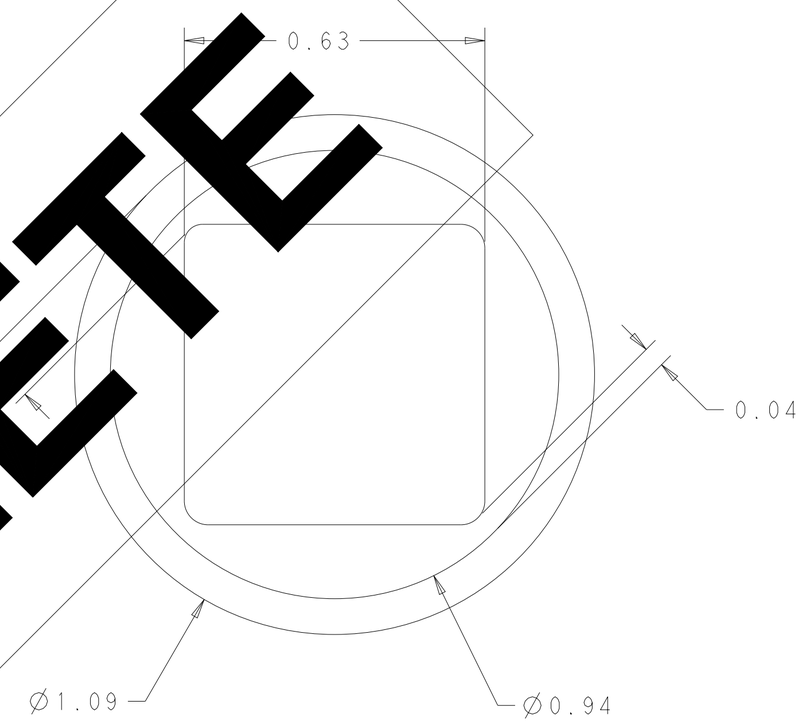

4. SOLDER PIN DETAIL
SCALE 10:1

△5 SOLDER TERMNIATION AREA
SCALE 40:1
RECOMMENDED PRINTED CIRCUIT SOLDER HOLE
FINISHED HOLE: Ø1.02 ±.08
DRILLED HOLE: Ø1.15 ±.013
COPPER PLATE: .025 MIN
TIN PLATE: .008 MIN. (PER SURFACE)

OBSOLETE

THIS DRAWING IS A CONTROLLED DOCUMENT.

DIMENSIONS: mm

TOLERANCES UNLESS OTHERWISE SPECIFIED:
0 PLC ±-
1 PLC ±0.5
2 PLC ±0.25
3 PLC ±-
4 PLC ±-
ANGLES ±-

MATERIAL: - material_2

FINISH: - finish_spec_2

DWN R.GRZYBOWSKI 18MAY2010
CHK M.SYKES 18MAY2010
APVD M.PERCHERKE 18MAY2010
PRODUCT SPEC: -
APPLICATION SPEC: -
WEIGHT: -

Tyco Electronics TE — TE Connectivity

NAME: SOCKET CONNECTOR ASSEMBLY STRAIGHT, SOLDER TAIL FLATPAQ

SIZE	CAGE CODE	DRAWING NO	RESTRICTED TO
A2	00779	C-2085462	-

CUSTOMER DRAWING | SCALE 3:1 | SHEET 3 OF 3 | REV A1