THIS DRAWING IS UNPUBLISHED. RELEASED FOR PUBLICATION –,– .
© COPYRIGHT – By – ALL RIGHTS RESERVED.

LOC	DIST
—	—

REVISIONS

P	LTR	DESCRIPTION	DATE	DWN	APVD
	A	REV PER ECO-12-020950	11DEC12	PY	DW

DESIGNED FOR USE WITH .141 S.R.(RG 402/U)	
CABLE ENTRY DIAMETER MINIMUM	
HOUSING	.143
CONTACT	.037

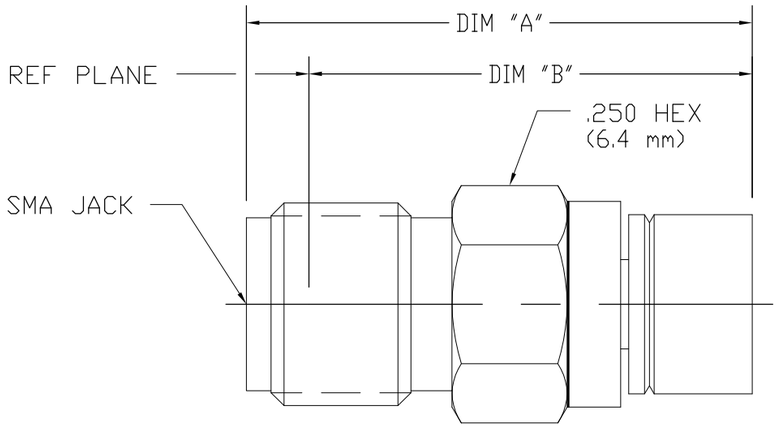

NOTES:
1. PICTORIAL VIEW IS AFTER CRIMPING
2. MIN STRAIGHT CABLE LENGTH: .292
3. IT IS SUGGESTED TO BEND CABLE PRIOR TO CRIMPING
4. CRIMP BUSHING MAY BE PACKAGED UNASSEMBLED. ORIENT GROOVE AS SHOWN.

BEFORE CRIMPING	.721 REF (18.3 mm)	.645 REF (16.4 mm)
AFTER CRIMPING	.620 MAX (15.7 mm)	.535 REF (13.6 mm)
	DIM "A"	DIM "B"

ELECTRICAL	MECHANICAL	ENVIRONMENTAL
Nominal Impedance (Ohms) 50	Interface Dimensions	TEMPERATURE RATING -65° TO +165°C
Frequency Range (GHz) DC to 18	MIL-STD-348 Fig 310.2	Vibration MIL-STD-202, Method
Volt Rating (VRMS MAX)	Recommended Mating	204, Condition D
@ Sea Level 500	Torque 7-10 In-lbs	Shock MIL-STD-202, Method 213,
VSWR 1.05+.01f(GHz)	Center Contact Captivation	Condition I
Insertion Loss (dB MAX) .03x $\sqrt{f(GHz)}$	Axial (Lbs) 6	Thermal Shock MIL-STD-202,
RF Leakage (dB MIN) -90 @ 2-3 GHz	Radial (In/Oz) NONE	Method 102, Condition C
Corona, 70,000 Ft (VRMS MIN) 375	Cable Retention	EXCEPT HIGH TEMP +115°C
Dielectric Withstanding Voltage	Axial Force (Lbs) 60	Moisture Resistance MIL-STD-202,
(VRMS MIN) @ Sea Level 1500	Torque (In/Oz) 55	Method 106
Contact Resistance (Milliohms MAX)	Weight (Grams) 2.1	Corrosion - MIL-STD-202, Method
Center Contact 3.0	Mating Characteristics	101, Condition B
Outer Contact 2.0	Insertion (Max Lbs) 3	
Cable to Housing 0.5	Withdrawal (Min Oz) 1	
RF High Potential @ Sea Level	Connector Engagement and	
(VRMS MIN @ 5 MHz) 1000	Disengagement (In/Lbs Max) 2	
I.R.(Megohms MIN) 5000		

HOUSING BUSHING	STAINLESS STEEL PER ASTM-A484 AND ASTM-A582, TYPE 303	PASSIVATE PER ASTM-A380
DIELECTRIC	TFE FLUOROCARBON PER ASTM-D-1457,	N/A
CENTER CONTACT	BERYLLIUM COPPER PER ASTM B196, ALLOY C17300, CONDITION H	GOLD PLATE PER MIL-G-45204 OVER COPPER PLATE PER MIL-C-14550
COMPONENT	MATERIAL	FINISH

THIS DRAWING IS A CONTROLLED DOCUMENT.

DIMENSIONS: INCHES

TOLERANCES UNLESS OTHERWISE SPECIFIED:

0 PLC	± –
1 PLC	± –
2 PLC	± –
3 PLC	± .005
4 PLC	± –
ANGLES	± ±1d

MATERIAL: SEE TABLE

FINISH: SEE TABLE

DWN	10DEC2012 P. YEAGER
CHK	11DEC12 D. WILSON
APVD	11DEC12 D. WILSON
PRODUCT SPEC	—
APPLICATION SPEC	—
WEIGHT	—

TE Connectivity

NAME: SMA STRAIGHT CABLE JACK COMPRESSION CRIMP ATTACHMENT M39012/81-3208 CAT-F

SIZE	CAGE CODE	DRAWING NO	RESTRICTED TO
A3	00779	C-1050935	—

CUSTOMER DRAWING

SCALE	SHEET	REV
4:1	1 OF 1	A