THIS DRAWING IS UNPUBLISHED. RELEASED FOR PUBLICATION 2007
© COPYRIGHT 2007 Tyco Electronics AMP GmbH ALL RIGHTS RESERVED.

PROJECT NO.	LOC	DIST
EGATN07138	A1	-

REVISIONS

P	LTR	DESCRIPTION	DATE	DWN	APVD
	A1	SEE E-08-012925	27MAY2008	CA	VB
	A2	SEE E-12-013952	03AUG2012	SK	AK

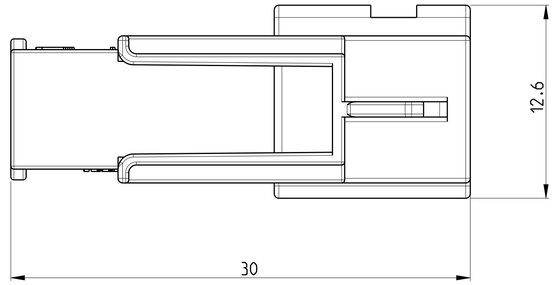

2:1

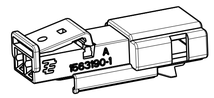

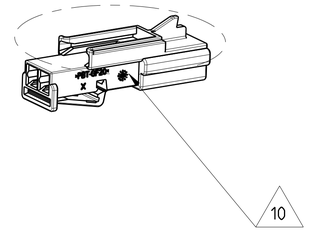

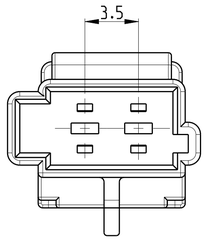

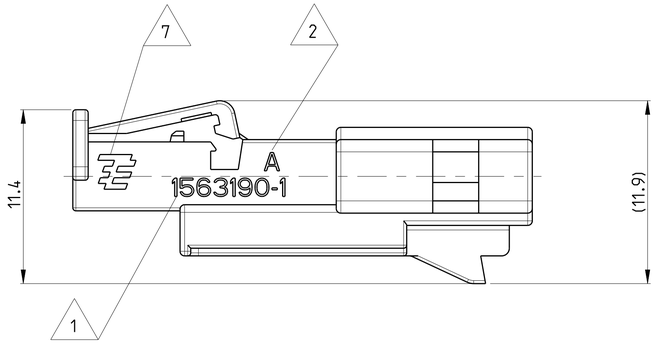

B-B

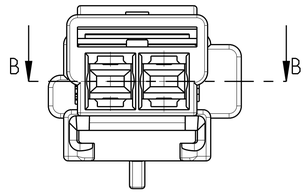

NOTES
BEMERKUNGEN

NV NOTE NOT VALID
Bemerkung nicht verwendet

1 ORDER NUMBER
BESTELL-NUMMER

2 REVISION NUMBER
WERKZEUGAENDERUNGSINDEX

3 MATERIAL MARKING
WERKSTOFFKENNZEICHNUNG

NV GM LOGO
GM Logo

5 PRODUCTION DATE
PRODUKTIONSDATUM

6 CONTACT CAVITY NUMBER
KONTAKTKAMMERNUMMER

7 TE LOGO
TE Logo

8 PACKAGING: BULK MATERIAL IN CARDBOARD BOX
VERPACKUNG: SCHUETTGUT IN KARTON

9 TOOL CAVITY MARKING
NESTMARKIERUNG

10 SLOT FOR GM 13257300 (ZUH 360)
Aufnahme fuer GM 13257300 (ZUH 360)

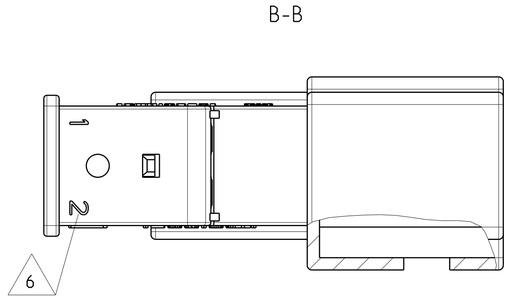

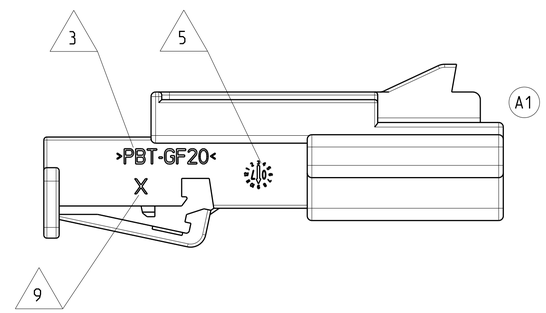

CODING A

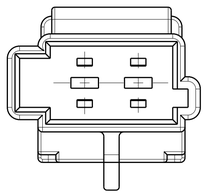

CODING B

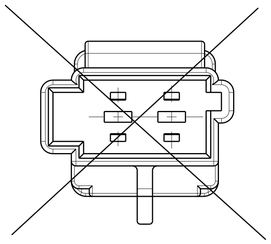

-	0-1563190-2	A	2 Pos. TAB 1.6x0.6. TAB-Hsg. CODB	tbd	PBT-GF20	1.3	1
19179872	0-1563190-1	A	2 Pos. TAB 1.6x0.6. TAB-Hsg. CODA	BLACK	PBT-GF20	1.3	1
CUSTOMER PART NO	PART NO	REV	DESCRIPTION	COLOR	MATERIAL	WEIGHT [g]	ITEM NO

A1

0-1452140-3	2 Pos. MT2. Rec-Hsg.	
1-0962580-1	2 Pos. MT2. Rec-Hsg.	
0-1563189-1	2 Pos. MT2. Rec-Hsg.	
TE BESTELL-NR. TE ORDER NO.	BENENNUNG DESCRIPTION	
COUNTERPARTS GEGENSTECKER		

A2

0-1241846-2	1.5	CuFe 2	PRETINNED
0-0964267-2	0.5-1.0	CuFe 2	PRETINNED
0-0964265-2	0.35-0.5	CuFe 2	PRETINNED
TE ORDER NO STRIP FORM	WIRE RANGE MM²	MATERIAL	FINISH

RRECOMMENDED CONTACT SYSTEM: MICRO TIMER 2 TYPE A: UNSEALED
FOR CABLE INSULATION TYPE FLR ACC. DIN 72551 / ISO 6722 MAX. WIRE SIZE 1.5mm²
MAX. CABLE ISOLATION CRIMP DIAMETER 2.9mm
FOR CABLE INSULATION TYPE TXL ACC. SAE J1128 MAX. WIRE SIZE 1.0mm² OR MAX AWG 18
THE USE OF OTHER CABLE TYPES MUST BE CHECKED IN ANY INDIVIDUAL CASE!

THIS DRAWING IS A CONTROLLED DOCUMENT.

DIMENSIONS: mm
TOLERANCES UNLESS OTHERWISE SPECIFIED:
0 PLC ±0.3
1 PLC ±0.3
2 PLC ±0.3
3 PLC ±-
4 PLC +-
ANGLES ±1°
MATERIAL -
FINISH -

DWN C. Anghel 29JUN2007
CHK A. Ketteler 29JUN2007
APVD -
PRODUCT SPEC 108-94118
APPLICATION SPEC 114-18901
WEIGHT -

TE Connectivity

NAME 2 Pos. 1.6x0.6. TAB Hsg.
- -

SIZE	CAGE CODE	DRAWING NO	RESTRICTED TO
A1	00779	C-1563190	-

CUSTOMER DRAWING | SCALE 5:1 | SHEET 1 OF 1 | REV A2

4805 (3/11)