| REV | |
|---|---|
| C | AEC16-40S * |

REVISIONS

| SYM | DESCRIPTION | DATE | APPROVED |
|---|---|---|---|
| NC | NEW RELEASE PER E.O. P17539 | 11-20-01 | R.D.R. |
| A | REVISED PER E.O. P17720 | 4-12-02 | R.D.R. |
| B | REVISED PER E.O. P20131 | 7-29-10 | R.D.R. |
| C | REVISED PER ECO-13-005317 | 11-8-12 | D.M. |

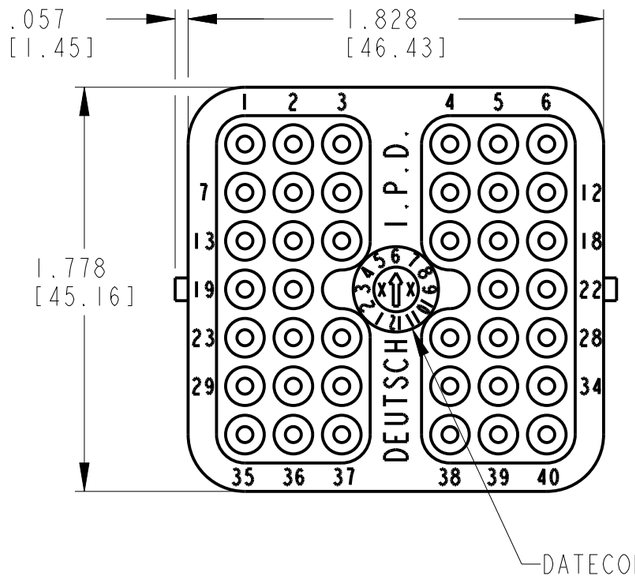


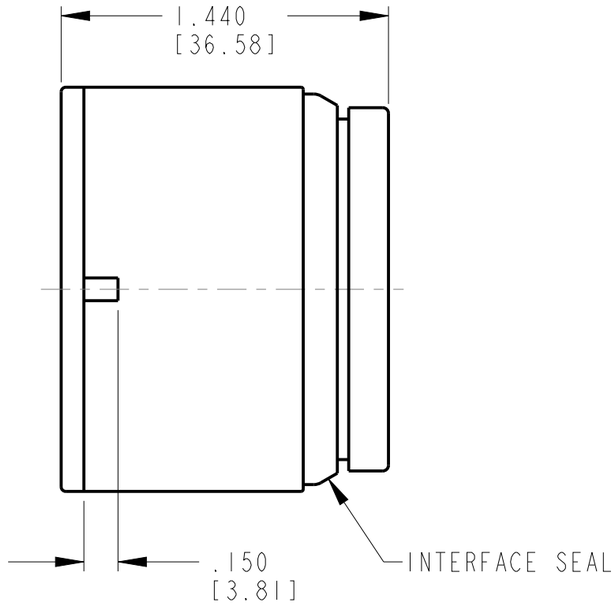


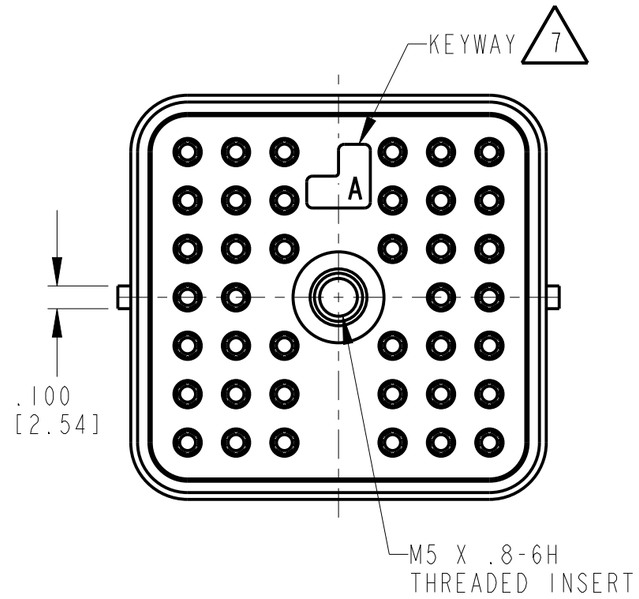


7 SEE SHEET 2 FOR OTHER KEY ARRANGEMENTS.

6. MATERIAL- PLUG: PLASTIC; SEAL/GROMMET: RUBBER; THREADED INSERT: STEEL.

5. THIS PLUG MATES WITH AEC14-40P*-**** AND AEC17-40P*-**** RECEPTACLE. (*=A,B,C,D KEYS; ****=ALL MODIFICATIONS). CONSULT FACTORY FOR MODS.

4 FOR CONTACTS AND WIRE PERFORMANCE AND APPLICATION CHARACTERISTICS, SEE ENVELOPE DRAWING 0425-015-0000.

3. PLUG SUPPLIED WITH DUST CAP. (NOT SHOWN).

2. DIMENSION TOLERANCE: ±.025 [.635].

1. DIMENSIONS ARE IN INCHES [mm].

NOTES:

| MIN. INSUL. OD [mm] | MAX. INSUL. OD [mm] | WIRE RANGE [mm²] REF ONLY 4 |
|---|---|---|
| .100 [2.540] | .134 [3.404] | 14-20 AWG [2.0-0.50] |

| | SIGNATURE & DATE |
|---|---|
| DR | J. APOSTOL 05NOV2012 |
| CHK | D. HASIBUAN 11/7/12 |
| PE | D. HASIBUAN 11/7/12 |
| | |
| APPD | D. MEYER 11/8/12 |
| SCALE NONE | WT ——— |

PLUG
40 SIZE 16
KEYS: A,B,C,D
AEC SERIES

ENVELOPE

EP | MATL. CODE

3850 INDUSTRIAL AVE.
HEMET, CA 92545
DEUTSCH INDUSTRIAL

B | DWG SIZE

AEC16-40S *

CODE 11139 | SHEET 1 OF 2

| REV | |
|---|---|
| C | AEC16-40S* |

| REVISIONS | | | |
|---|---|---|---|
| SYM | DESCRIPTION | DATE | APPROVED |
| C | SEE SHEET 1 | 11-8-12 | D.M. |
| | | | |
| | | | |
| | | | |

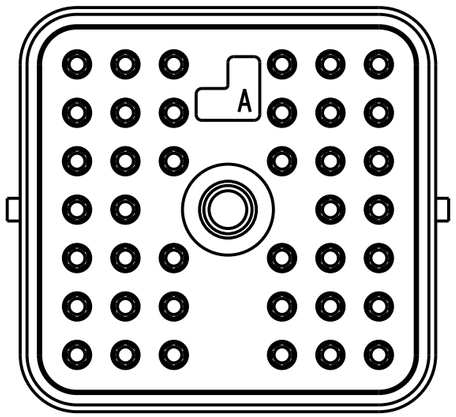


AEC16-40SA
KEY 'A'

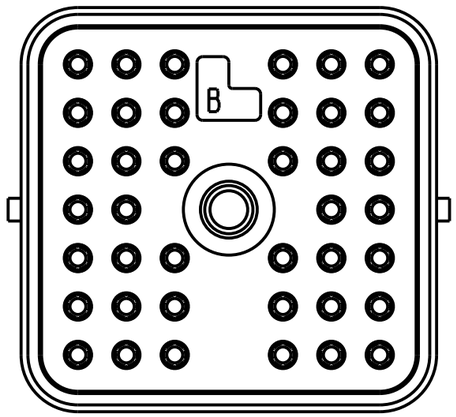


AEC16-40SB
KEY 'B'

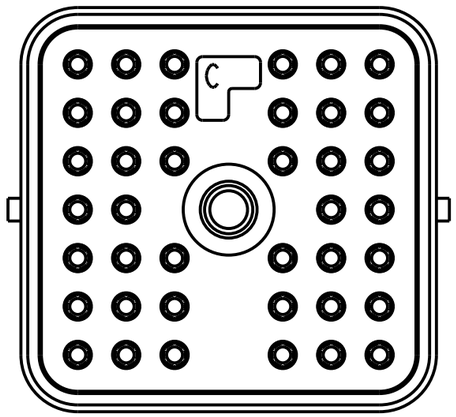


AEC16-40SC
KEY 'C'

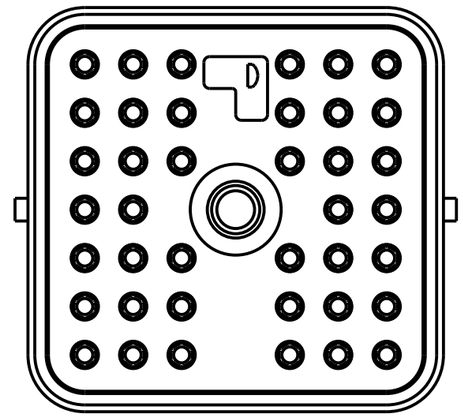


AEC16-40SD
KEY 'D'

NOTES:

| | SIGNATURE & DATE |
|---|---|
| DR | J. APOSTOL 05NOV2012 |
| CHK | D. HASIBUAN 11/7/12 |
| PE | D. HASIBUAN 11/7/12 |
| | |
| APPD | D. MEYER 11/8/12 |
| SCALE NONE | WT ——— |

PLUG
40 SIZE 16
KEYS: A,B,C,D
AEC SERIES

ENVELOPE

| EP | MATL. CODE |
|---|---|

DEUTSCH INDUSTRIAL
3850 INDUSTRIAL AVE.
HEMET, CA 92545

| B | AEC16-40S* |
|---|---|
| DWG SIZE | CODE 11139 / SHEET 2 OF 2 |