REVISIONS			
SYM	DESCRIPTION	DATE	APPROVAL
B	REDRAWN ECO 35891	1-20-65	PS

DM5606-*-*S

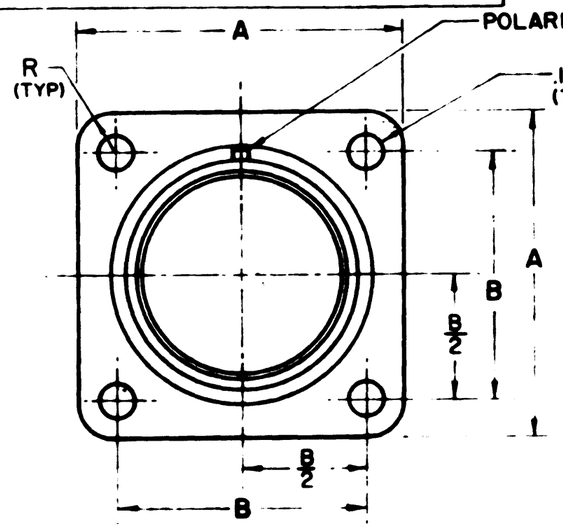

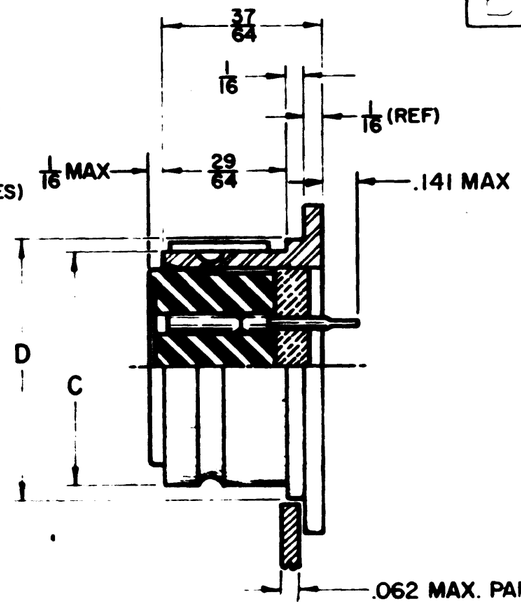

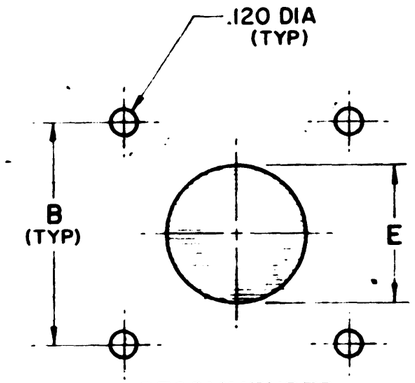

RECOMMENDED PANEL MTG. HOLES

SHELL SIZE	PART NUMBER	A	B	C DIA	D DIA	E DIA +.010 −.000	R	WEIGHT IN LBS
3	DM5606-3-*S	7/8	.625	7/16	17/32	.541	1/8	
7	DM5606-7-*S	1	.719	37/64	43/64	.681	1/8	
12	DM5606-12-*S	1 3/32	.812	45/64	13/16	.822	1/8	
19	DM5606-19-*S	1 3/16	.906	27/32	15/16	.947	1/8	
27	DM5606-27-*S	1 9/32	.968	1	1 1/8	1.135	1/8	
37	DM5606-37-*S	1 7/16	1.187	1 1/8	1 7/32	1.228	1/8	
61	DM5606-61-*S	1 25/32	1.437	1 13/32	1 1/2	1.510	5/32	

1-INSERT, ARE CONTINUOUS DIELECTRIC
2-CONTACT IDENT IS IN CONTRASTING
4-SHELL CADMIUM PLATED
NOTES:

ITEM	QTY	PART NUMBER	DESCRIPTION	NEXT ASSY	USED ON
LIST OF MATERIAL				APPLICATION	

TOLERANCES UNLESS OTHERWISE SPECIFIED
FRACTIONS .015 DECIMALS .005
ANGLES ½° 30' 0"
TIR .010
PARTS TO BE FREE OF BURRS AND SHARP EDGES

MATERIAL
FINISH

	SIGNATURE & DATE
DR	Gaynes 1-20-65
CHK	L. Mahan 1/20/65
PE	Lance Lindbo
APPD	

ENVELOPE
RECEPTACLE CONNECTOR
ELECTRICAL HERMETIC
MINIATURE
QUICK - DISCONNECT
SQUARE FLANGE MTG.

SCALE NONE

The Deutsch Company
ELECTRONIC COMPONENTS DIVISION
Municipal Airport • Banning, California

B DM5606-*-*S

SHEET 1 OF 1