tyco Electronics

Specification Control Drawing

Raychem

a) Part as supplied

222D953-*-G03

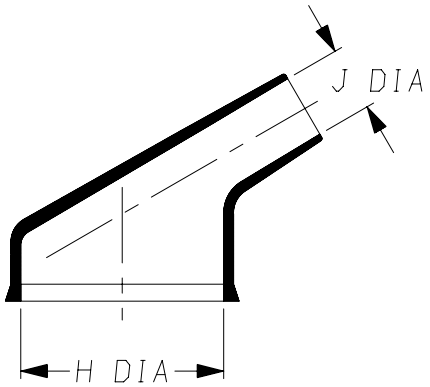

b) Part after unrestricted recovery

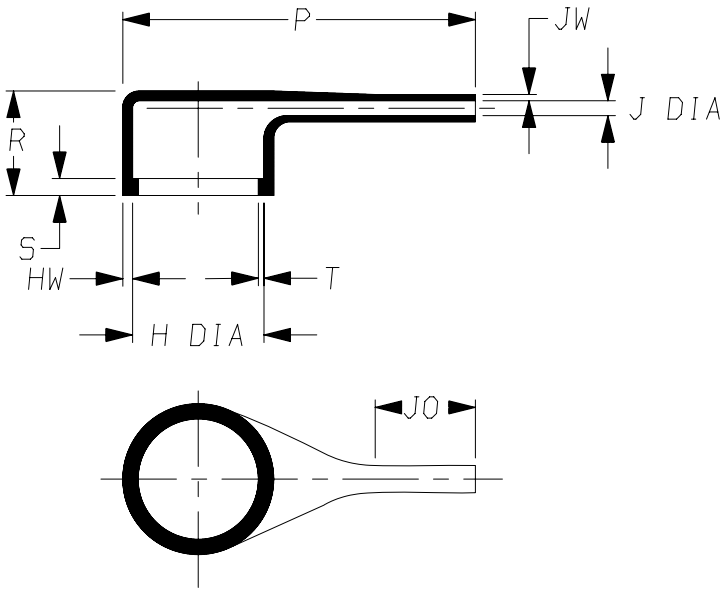

DIMENSIONS in millimetres (in inches, for reference)

Part No.	H Min a	H Max b	J Min a	J Max b	P ±10% b	R ±10% b	S ±10% b	T ±10% b	JO REF b	HW ±20% b	JW ±20% b
222D953-*-G03	34 (1.34)	26.0 (1.02)	8.0 (0.31)	3.1 (0.12)	66 (2.60)	19 (0.75)	3.0 (0.12)	1.0 (0.04)	20 (0.79)	1.8 (0.07)	1.1 (0.04)
					#				#		

This is a trimmed variant

Modified dimensions are shown thus:- #

Copyright (!)

The copyright in this drawing is the property of Tyco Electronics UK Ltd. The drawing is issued on the condition that it is not copied, reproduced or disclosed to a third party, either in whole or in part without the prior written consent of Tyco Electronics UK Ltd.

Drawn A.LILLEY. Checked Issue 3 Date December 2006 Conforms to ISO Recommendations

3rd Angle Projection

Not to Scale

Approval

Design MKTG. Q.A.

Raychem	Specification Control Drawing	Part Number 222D953-*-G03 Issue 3

Iss.	Date	E.C.R. No.	Details of Change
2	April 1990	****	Redrawn
3	December 2006	CR06-DM-104	-12 Material description name changed
3	December 2006	CR06-HM-012	Imperial dimensions added

Ordering Information

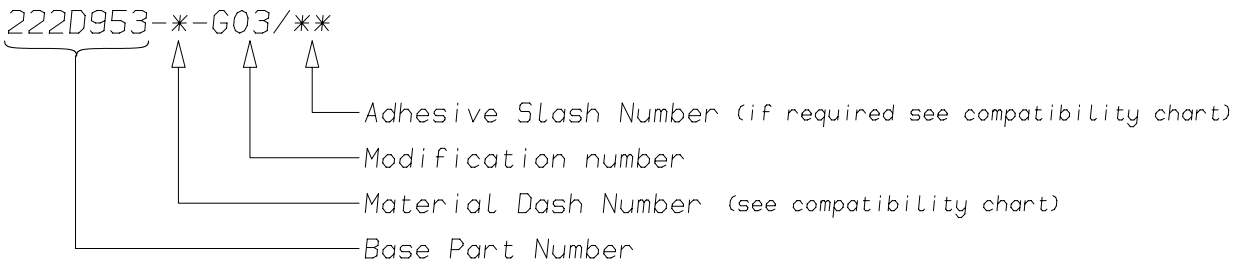

COMPATIBILITY CHART

Material Dash Number	Material Description	SPEC Number	Coating Slash Number
-3	POLYOLEFIN, SEMI-RIGID	RT-301, RK-6703	/42 ,/86, /180
-4	POLYOLEFIN, FLEXIBLE	RT-1304 RT-1050	/42 ,/86, /180
-6	SILICON	RT-602, RK-6706	N/A
-12	FLUOROELASTOMER, FLEXIBLE	RT-1312, RW-2071	/225
-25	ELASTOMER, FLUID RESISTANT	RT-1325, RK-6713	/42, /86, /225
-100	ZERO HALOGEN	RT-1323, RK-6717	/86, /180
-130	POLYOLEFIN, COMMERCIAL FLEXIBLE	RW-2008	/42

NOTES

(1) As supplied dimensions are for uncoated parts, when coating is added entry diameters will reduce by 1.5mm Max.

Tyco Electronics UK Ltd.
Faraday Road,
Swindon, Wiltshire, SN3 5HH
England
Telephone: (01793) 528171 Fax: 572516

Tyco Electronics Corporation
300, Constitution Drive,
Menlo Park, CA 94025
USA
Telephone (650) 361-3860 Fax: (650) 361-5579

Cage Code K1010

Cage Code 06090