THIS DRAWING IS UNPUBLISHED. RELEASED FOR PUBLICATION 20
© COPYRIGHT 20 BY TYCO ELECTRONICS CORPORATION. ALL RIGHTS RESERVED.

LOC	DIST
B	E

REVISIONS

P	LTR	DESCRIPTION	DATE	DWN	APVD
	C	ECR-06-023739	20/08/06	MJG	JA
	D	ECR-09-008730	16/04/09	MJG	JA

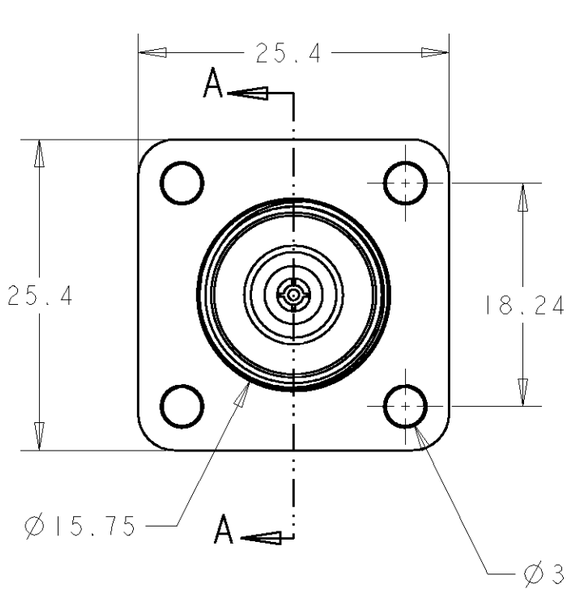

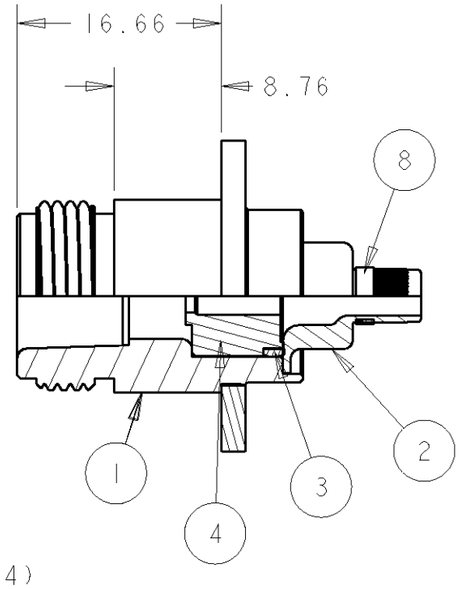

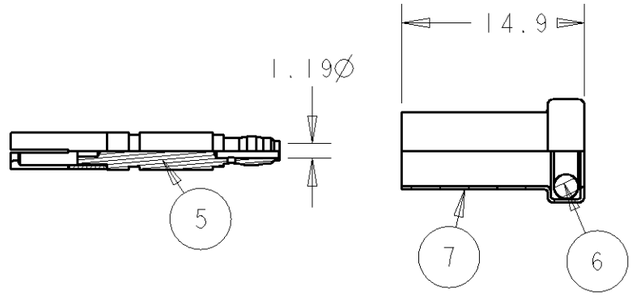

SECTION A-A
SCALE 2:1

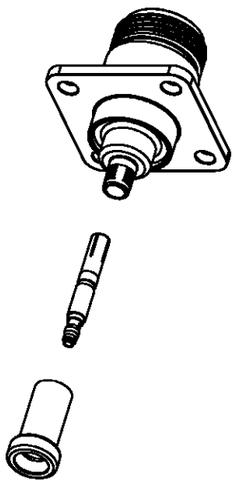

NOTES:

1. FOR USE WITH RG-400U KX23 CABLE
   UTILISER AVEC CABLE RG-400U KX23

2. CRIMP WITH HAND TOOL Pt No 220045-2
   PINCE A SERTIR REF: 220045-2

3. INSTRUCTION SHEET 408-2028-4
   INSTRUCTION DE SERTISSAGE: 408-2028-4

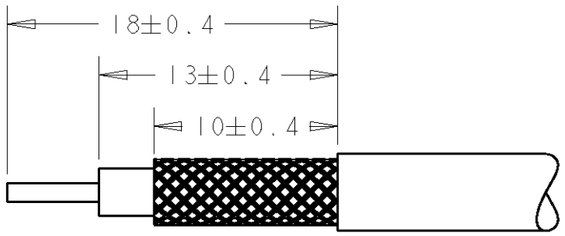

RECOMMENDED CABLE PREPARATION
DENUDAGE RECOMMANDE

	SILICONE	GASKET	8
Ag	COPPER	SHELL	7
	SILICONE	GASKET	6
Au	BeCu	CONTACT	5
	PTFE	DIELECTRIC	4
Ag	BRASS	SPACER	3
Ag	BRASS	FERRULE	2
Ag	BRASS	BODY	1
FINISH	MARTERIAL	DESCRIPTION	ITEM

THIS DRAWING IS A CONTROLLED DOCUMENT FOR TYCO ELECTRONICS CORPORATION IT IS SUBJECT TO CHANGE AND THE CONTROLLING ENGINEERING ORGANIZATION SHOULD BE CONTACTED FOR THE LATEST REVISION.

DIMENSIONS: mm

TOLERANCES UNLESS OTHERWISE SPECIFIED:

0 PLC	±0.3
1 PLC	±0.3
2 PLC	±0.3
3 PLC	±0.3
4 PLC	±0.3
ANGLES	±1

MATERIAL

FINISH -

DWN	M.GREENER 20SEP2006
CHK	J.AMBROSE 20SEP2006
APVD	J.AMBROSE 20SEP2006
PRODUCT SPEC	-
APPLICATION SPEC	-
WEIGHT	-

Tyco Electronics
Tyco Electronics UK Ltd.
Bideford, North Devon, EX39 4HE

NAME
COAXICON RF CONN N SERIES
WEATHERPROOF PANEL JACK

SIZE	CAGE CODE	DRAWING NO	RESTRICTED TO
A3	00779	C-132546	-

CUSTOMER DRAWING | SCALE 3:1 | SHEET 1 OF 1 | REV C