SPECIFICATION CONTROL DRAWING 5030A1318

CHEMINAX 50 OHM, AWG 30, 7 STRANDS OF AWG 38, COAXIAL CABLE

Date: 04-07-00
Revision: D

THIS SPECIFICATION SHEET FORMS A PART OF THE LATEST ISSUE OF RAYCHEM SPECIFICATION 1200.

CONSTRUCTION DETAILS

DIMENSIONS ARE NOMINAL VALUES IN INCHES UNLESS OTHERWISE DESIGNATED.

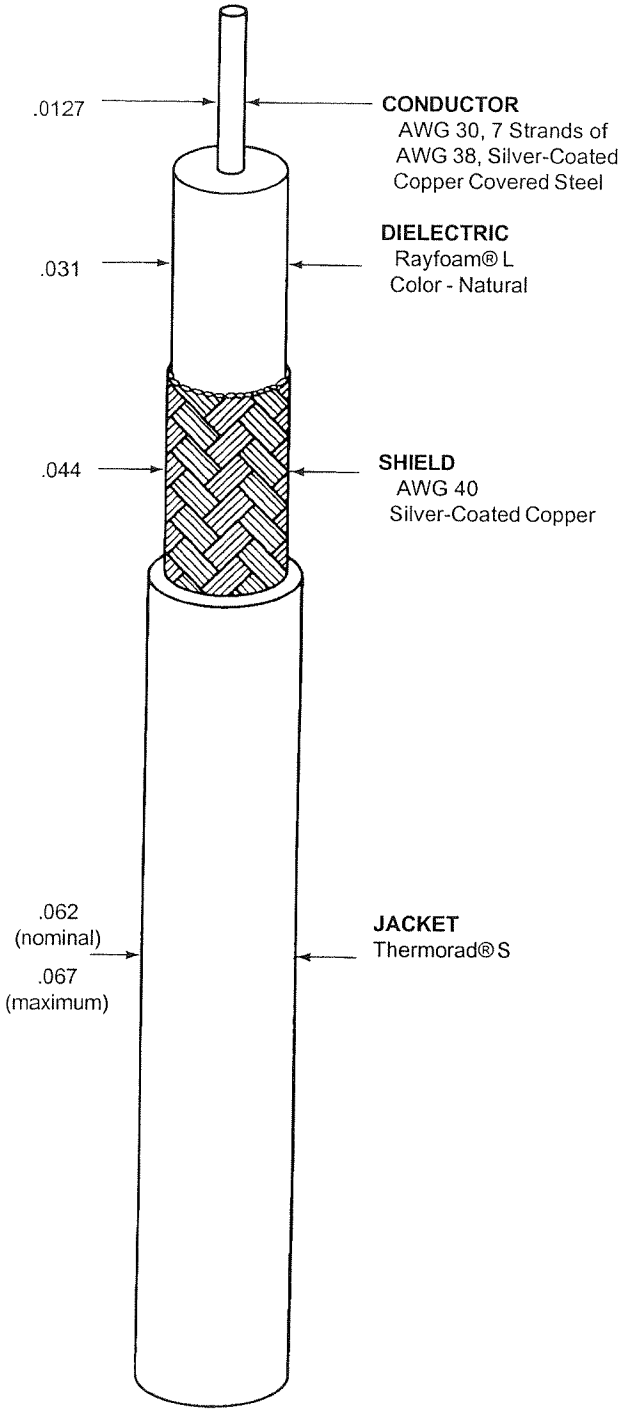

Outer jacket color will be black (designated by a "-0" appended to the part number, e.g., 5030A1318-0) unless otherwise specified.

Designate outer jacket color with a dash number in accordance with MIL-STD-681.

ELECTRICAL CHARACTERISTICS

CHARACTERISTIC IMPEDANCE	50 ± 2 ohms, Method A
CAPACITANCE	27.5 pF/ft. (nominal)
VELOCITY OF PROPAGATION	74% (nominal)

ADDITIONAL REQUIREMENTS

ELECTRICAL

CONDUCTOR RESISTANCE	235. ohms/1000 ft. (nominal)
INSULATION RESISTANCE	10,000 megohms (minimum) for 1000 ft.
JACKET FLAWS	
SPARK TEST	1.0 kV (rms)
IMPULSE TEST	6.0 kV (peak)
VOLTAGE WITHSTAND (DIELECTRIC)	750 volts (rms) (minimum)

ENVIRONMENTAL

AGING STABILITY	135°C/-55°C/1.75 inch mandrel
FLAMMABILITY	Method C
HEAT SHOCK	225°C
LOW TEMPERATURE-COLD BEND	-55°C/1.75 inch mandrel
VOLTAGE WITHSTAND (POST ENVIRONMENTAL)	1000 volts (rms), 1 minute

PHYSICAL

INSULATION (DIELECTRIC)	
ELONGATION	50% (minimum)
TENSILE STRENGTH	1000 lbf/in² (minimum)
JACKET	
ELONGATION	250% (minimum)
TENSILE STRENGTH	2000 lbf/in² (minimum)
JACKET THICKNESS	.009 inch (nominal)
SHIELD COVERAGE	90% (minimum)
WEIGHT	3.0 lbs/1000 ft. (nominal)

Raychem
300 Constitution Drive
Menlo Park, California 94025
1-800-2 Raychem FAX: 1-415-361-6297

THIS SPECIFICATION SHEET TAKES PRECEDENCE OVER DOCUMENTS REFERENCED HEREIN. REFERENCE DOCUMENTS SHALL BE OF THE ISSUE IN EFFECT ON DATE OF INVITATION FOR BID.